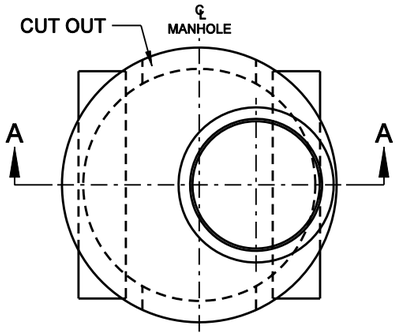

TOP VIEW

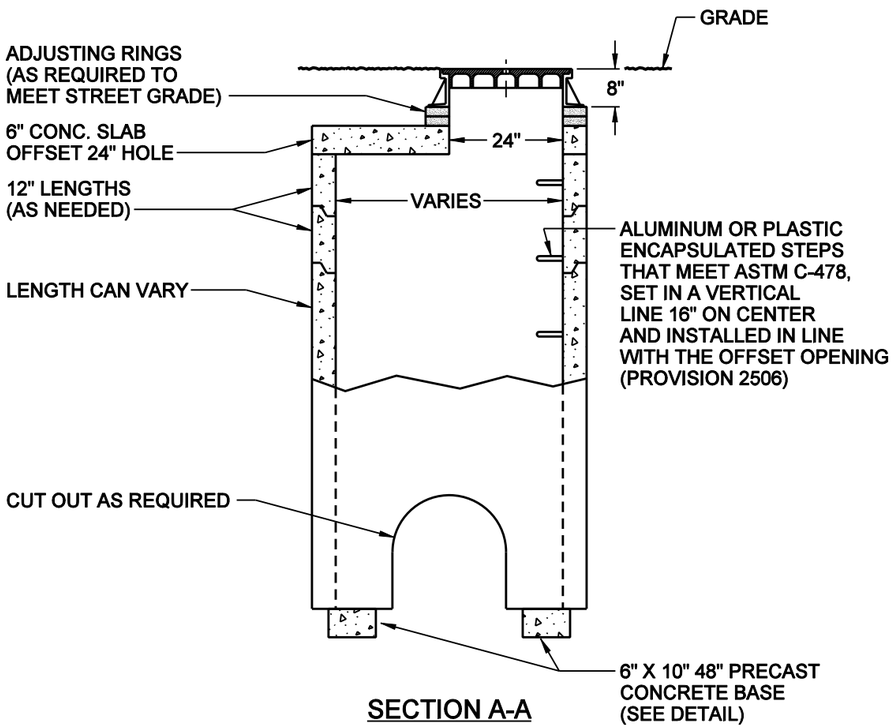

SECTION A-A

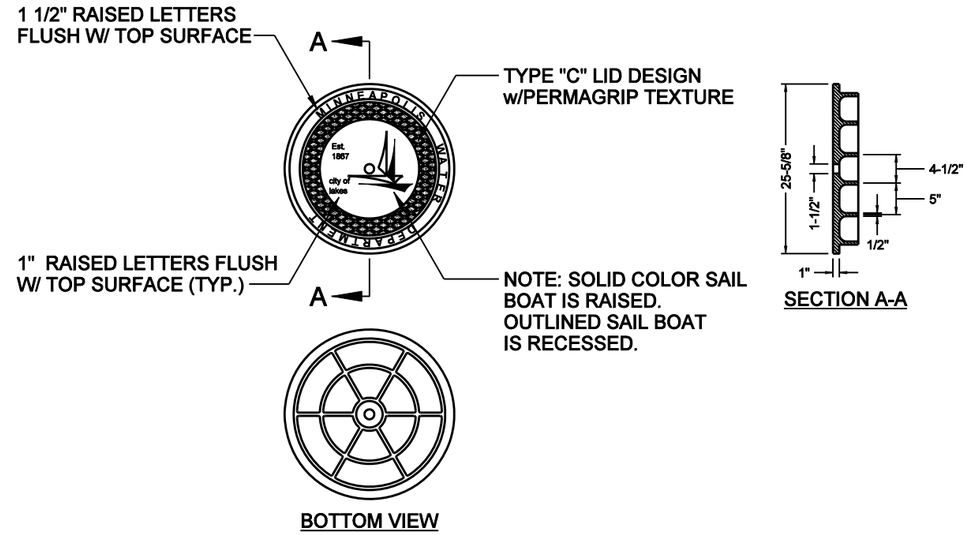

SECTION A-A

BOTTOM VIEW

STANDARD MANHOLE COVER DETAIL

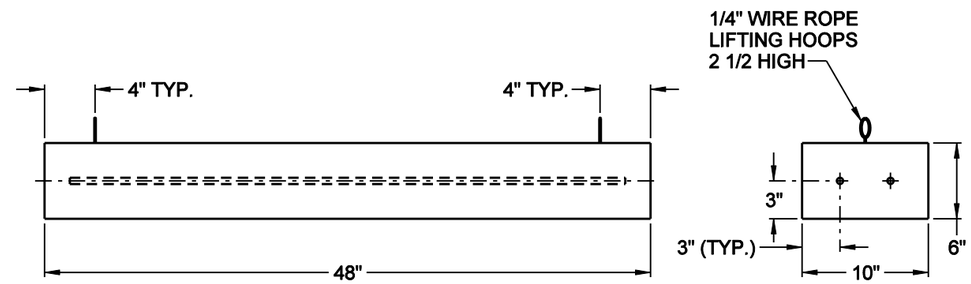

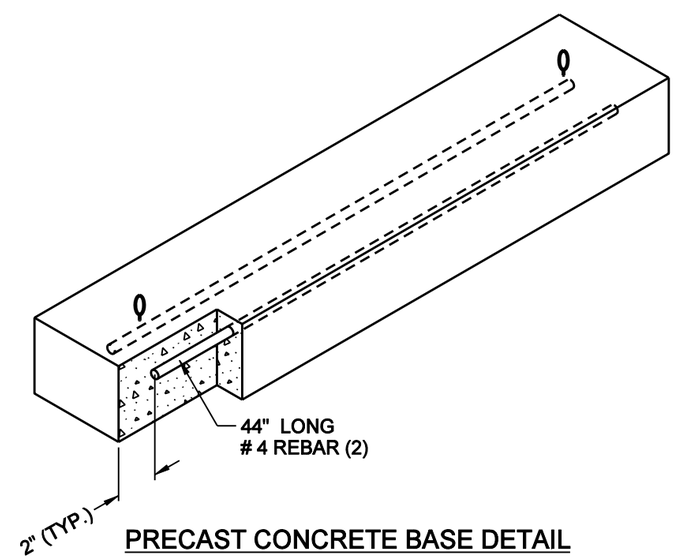

PRECAST CONCRETE BASE DETAIL

MINNEAPOLIS DEPARTMENT OF PUBLIC WORKS		STANDARD MANHOLE	STANDARD PLATE NO. WATR-2000A-R2
DRAWN: TDS	DATE: 1/1/12		
APPROVED: RCE	DATE: 1/1/12		

NOT TO SCALE