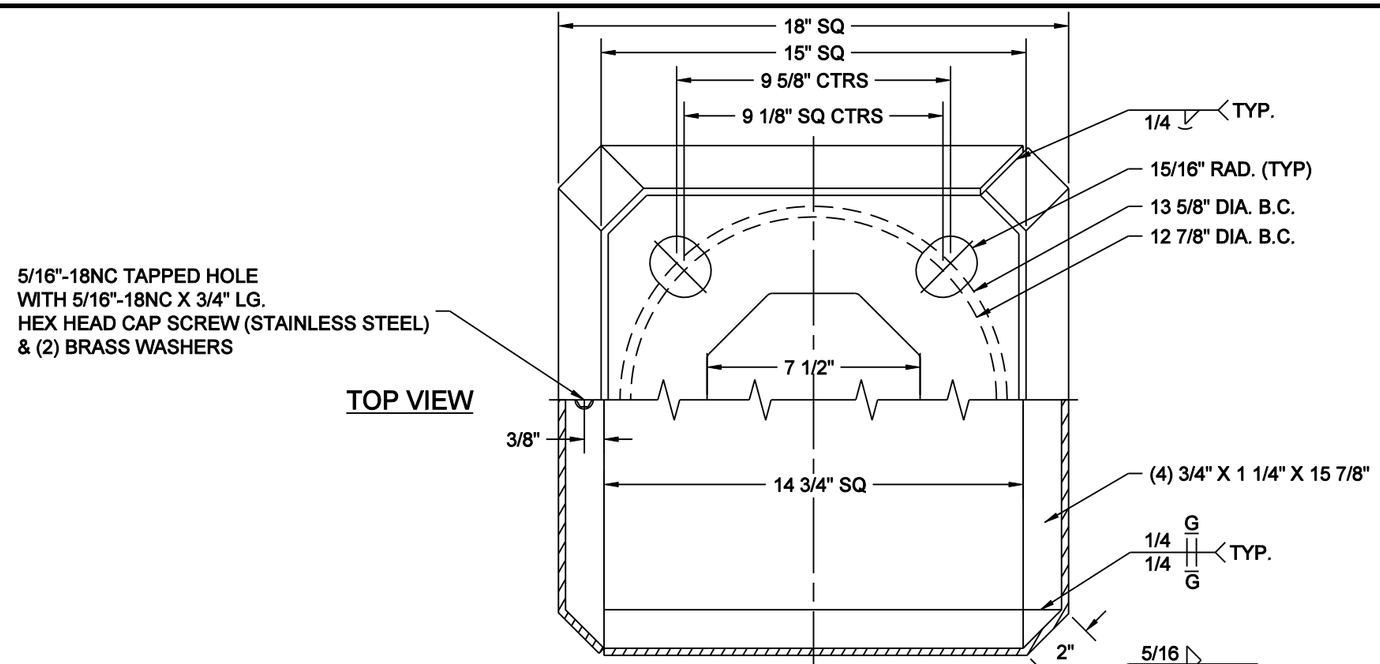

TOP VIEW

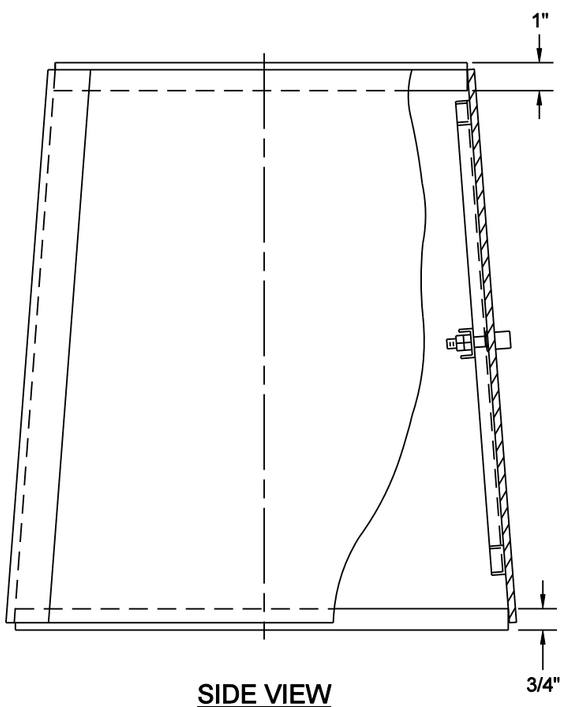

SIDE VIEW

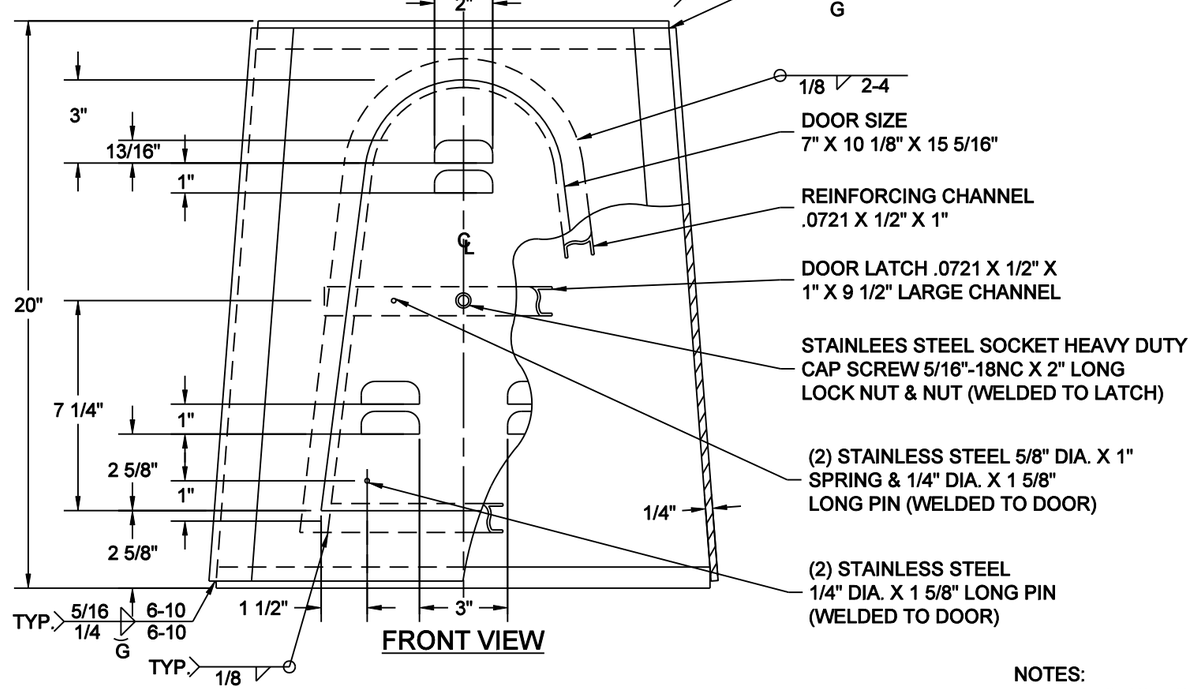

FRONT VIEW

NO SCALE

NOTES:
1. SKIRT & BOTTOM PLATE MATERIAL - STAINLESS STEEL (TYPE 201) 60,000 PSI MIN. YIELD AFTER FABRICATION.
   TOP PLATE MATERIAL - LOW CARBON STEEL 36,000 PSI MIN. YIELD.
2. FINISH - EPOXY PRIMER.
3. FINISH - UPS BROWN THERMO-SET ACRYLIC.

MINNEAPOLIS DEPARTMENT OF PUBLIC WORKS		BASE - SIGNAL TRANSFORMER TYPE "A" - OVERHEAD	STANDARD PLATE NO. TRAF-1165
DRAWN: LPK	DATE: 1/1/11		
APPROVED: DRP	DATE: 1/1/11		