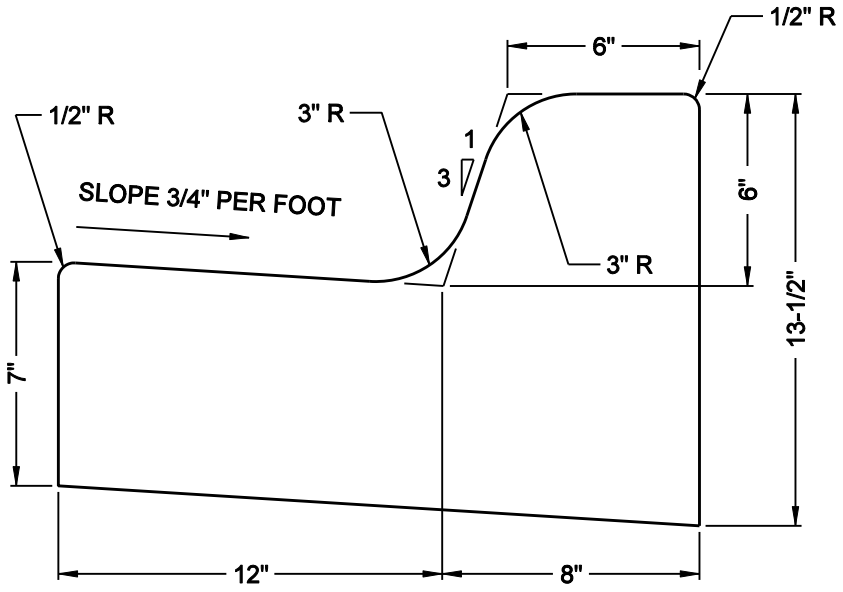

*SLOPE NOT TO EXCEED 1:20 AT CURB RAMPS

MINNEAPOLIS DEPARTMENT OF PUBLIC WORKS		B612 CURB AND GUTTER	STANDARD PLATE NO. ROAD-1000
DRAWN: JFC	DATE: 4/1/08		
APPROVED: GAS	DATE: 5/19/08		