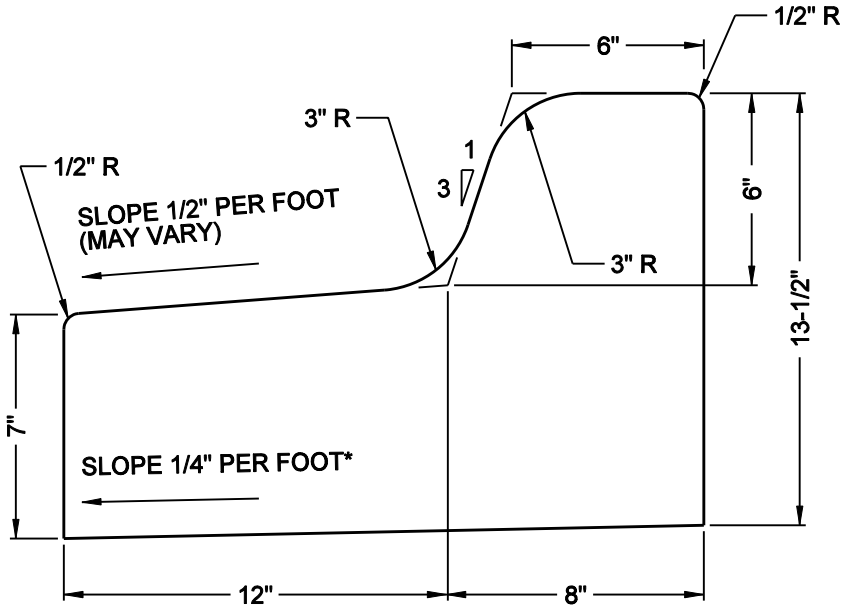

MINNEAPOLIS DEPARTMENT OF PUBLIC WORKS		B612 CURB AND GUTTER TIPOUT	STANDARD PLATE NO. ROAD-1001
DRAWN: JFC	DATE: 4/7/08		
APPROVED: GAS	DATE: 5/19/08		