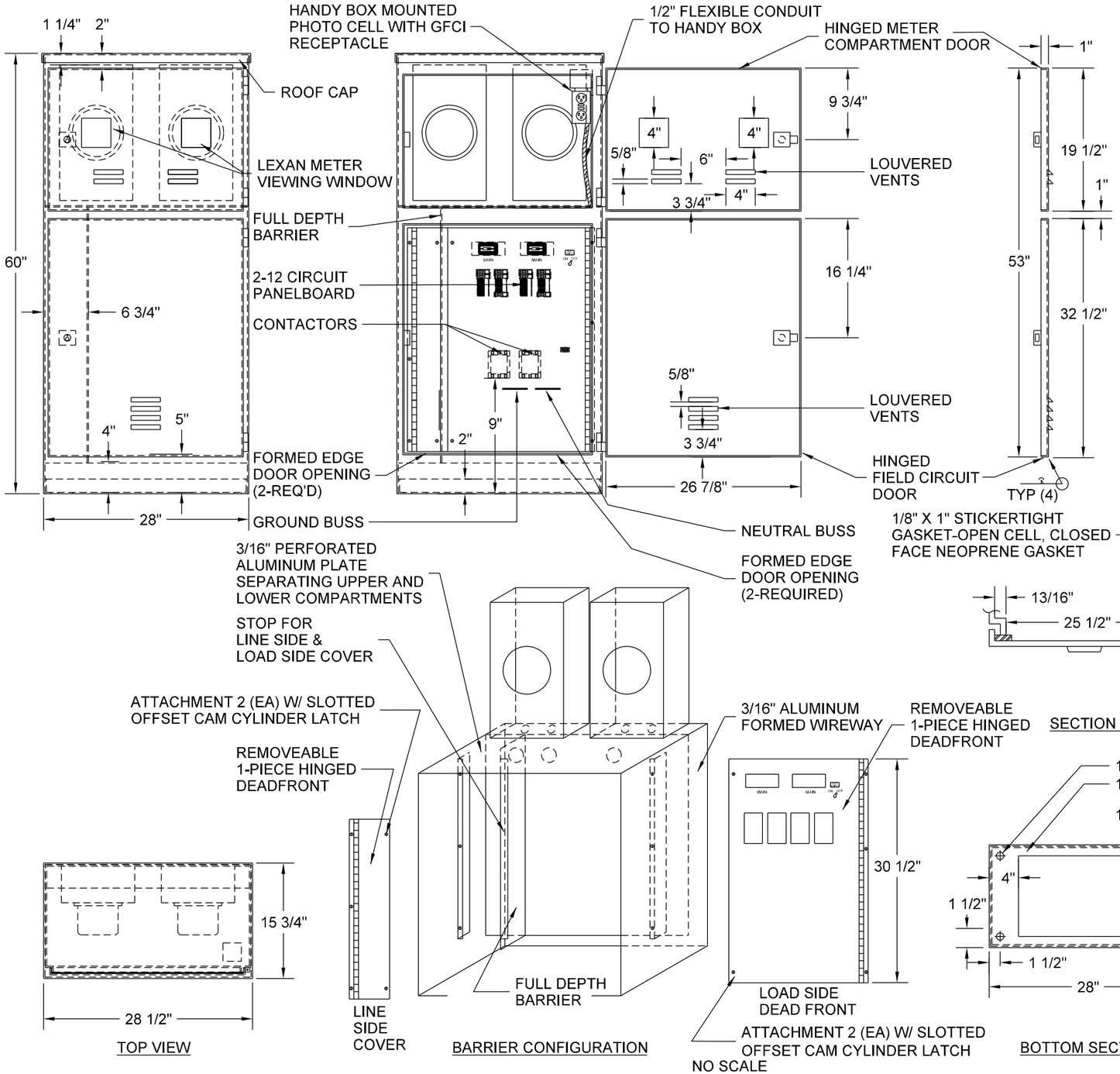

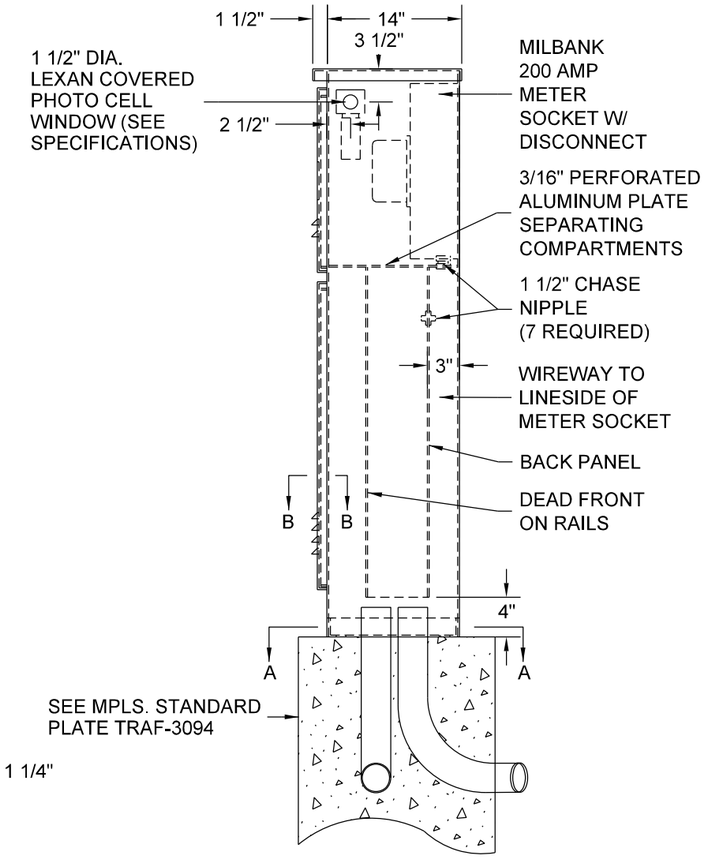

RIGHT SIDE ELEVATION

1. ALL HINGES SHALL BE LIFTOFF SOUTHCO MODEL 96-10-500-50.
2. DOORS SHALL BE PROVIDED WITH NEOPRENE GASKET TO FORM A COMPLETE SEAL WITH THE ENCLOSURE.
3. FEED POINT PEDESTAL CABINET SHALL BE NEMA 3R ENCLOSURE, U.L. LISTED AND LABELED "SUITABLE FOR USED AS SERVICE ENTRANCE EQUIPMENT."
4. FEED POINT PEDESTAL CABINET MATERIAL SHALL BE 3/16" 5052-O ALUMINUM.
5. UTILITY APPROVED METER SOCKET WITH DISCONNECT.
6. THE METER COMPARTMENT DOOR AND THE CIRCUIT BREAKER COMPARTMENT DOOR SHALL BE SECURED WITH A STANDARD CITY OF MPLS. LOCK AND BE EQUIPPED WITH A SWING DOWN PLATE WITH TWO KEYS.
7. LOCKS TO BE FURNISHED & INSTALLED BY VENDOR.
8. ALL ATTACHMENTS TO CABINET SHALL BE WELDED OR USE STAINLESS STEEL STANDOFFS.
9. LOUVERS SHALL BE BACKED WITH PERFORATED (1/8" HOLE) STAINLESS STEEL SHEET.
10. WINDOWS SHALL BE CENTERED IN UPPER COMPARTMENT ON METER SOCKETS.
11. VENTILATION HOLES (1/8") SHALL BE PROVIDED IN CABINET FRONT AT 1/2" CENTERS AT ROOF CAP.
12. EQUIPMENT SHALL BE ARRANGED WITHIN CABINET AS APPROXIMATELY SHOWN.
13. PANELBOARD DEAD FRONTS SHALL BE PUNCHED TO MATCH FULL CAPACITY OF BREAKER PANEL.

MINNEAPOLIS DEPARTMENT OF PUBLIC WORKS		CABINET - ST. LIGHT SERVICE NON-CBD REFERENCE PLATE: TRAF-3094, TRAF-3635	STANDARD PLATE NO. TRAF-3463-R2
DRAWN: CLK	DATE: 3/26/14		
APPROVED: DHW	DATE: 3/26/14		