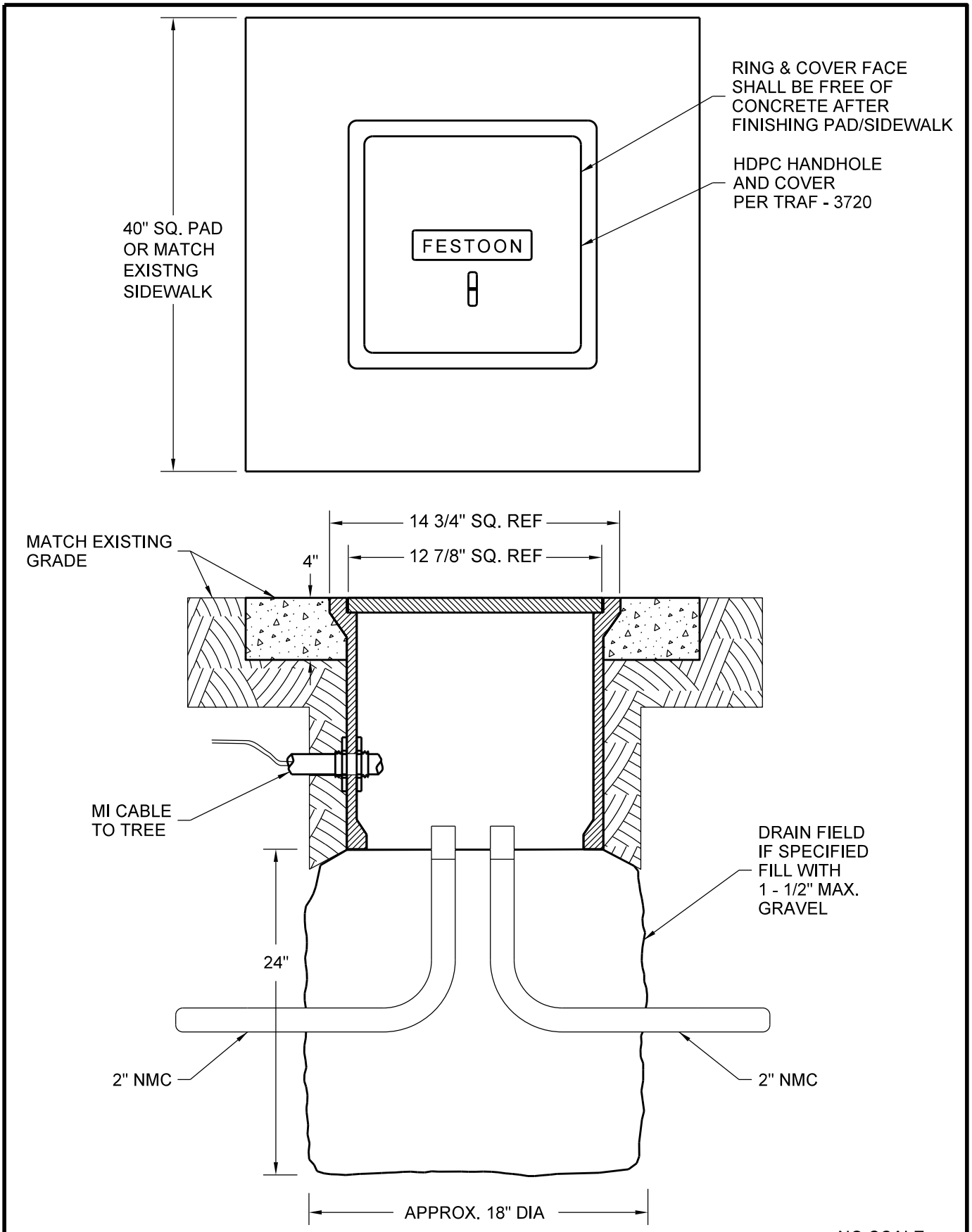

NO SCALE

MINNEAPOLIS DEPARTMENT OF PUBLIC WORKS		HANDHOLE - FESTOON 15" x 15" x 13" - HDPC INSTALLATION DETAIL REFERENCE PLATES: TRAF-3720, TRAF-3730	STANDARD PLATE NO. TRAF-3725
DRAWN: BKK	DATE: 02-12-13		
APPROVED: DRP	DATE: 02-12-13		