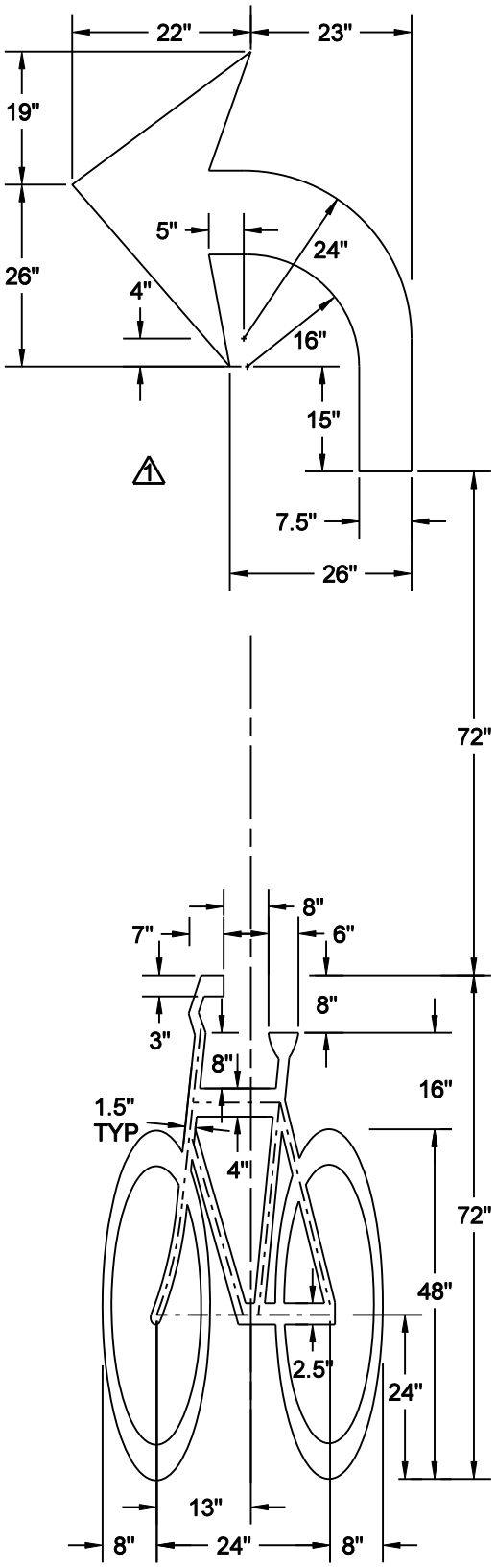

NOTE: 1 CENTER ARROW OVER BIKE SYMBOL

NO SCALE

MINNEAPOLIS DEPARTMENT OF PUBLIC WORKS		SYMBOLS - PAVEMENT MARKINGS BIKE / LEFT TURN ARROW	STANDARD PLATE NO. TRAF-7662-R1
DRAWN: JWD	DATE: 12/20/11		
APPROVED: DRP	DATE: 12/20/11		