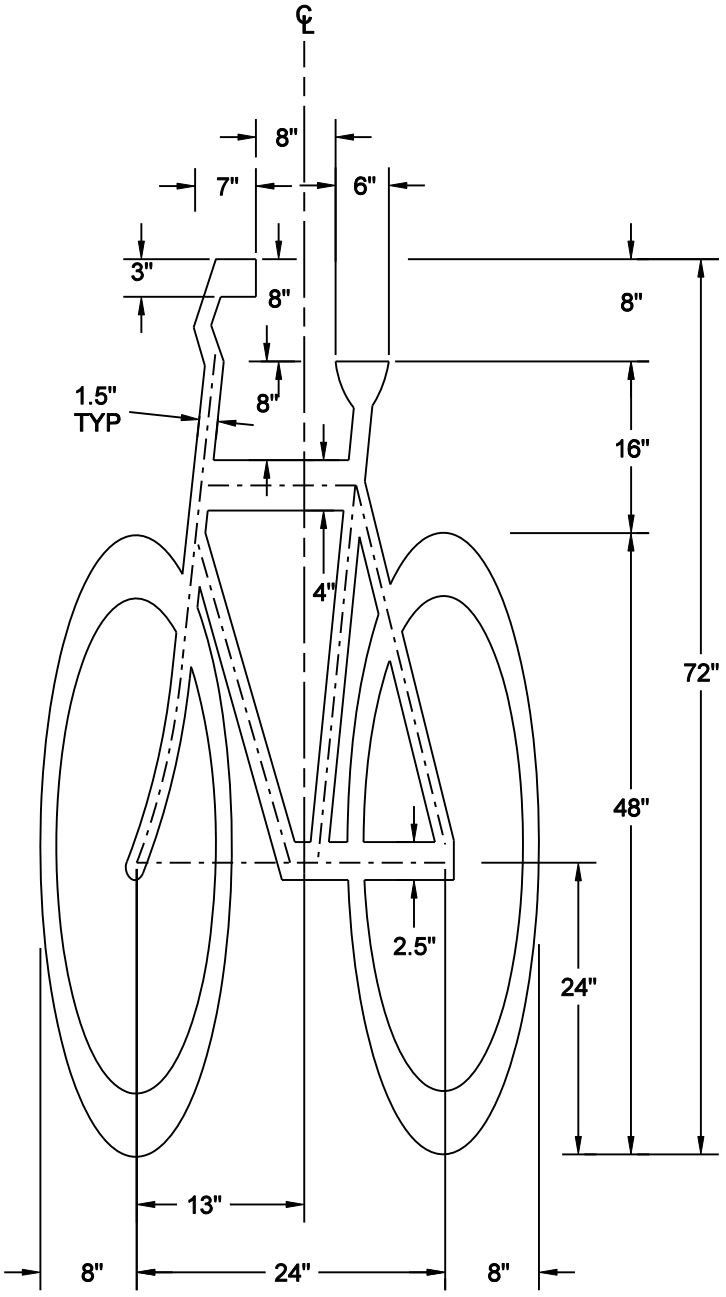

NO SCALE

MINNEAPOLIS DEPARTMENT OF PUBLIC WORKS		SYMBOLS - PAVEMENT MARKINGS BIKE	STANDARD PLATE NO. TRAF-7652
DRAWN: JWD	DATE: 9/06/11		
APPROVED: DRP	DATE: 11/9/11		