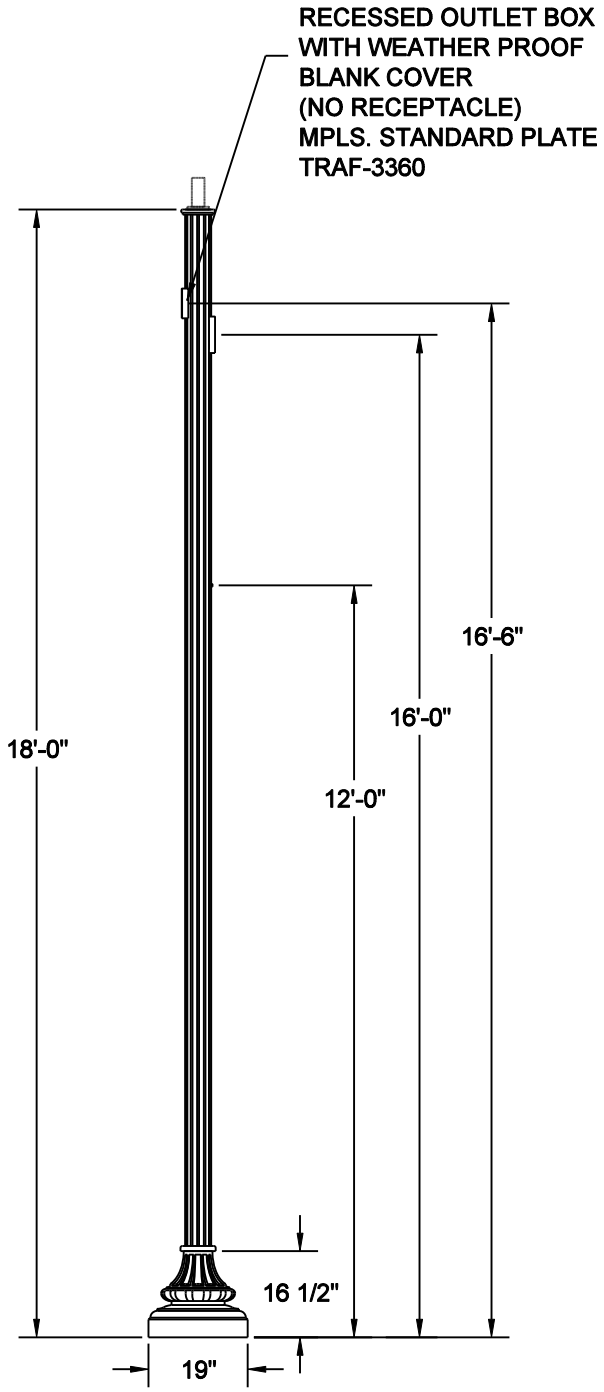

SPECIFICATIONS

DESCRIPTION
THE LIGHTING POST SHALL BE ALL ALUMINUM CONSTRUCTION CONSISTING OF A CAST BASE AND A 12 FLUTE SHAFT WITH A 3" X 6" TALL TENON FOR ARM MOUNTING. A GFI RECEPTACLE PROVISION MOUNTED AT SPECIFIED HEIGHT AND ORIENTATION. EYEBOLT PROVISION AND BANNER ARM PROVISIONS.

MATERIALS
THE SHAFT SHALL BE EXTRUDED ALUMINUM WITH A FOUR FOOT REINFORCING STALK FACTORY JOINED TO A CAST ALUMINUM BASE, (HEAVY WALL, 356.1 ALLOY) FORMED TRUE TO PATTERN WITH COMPLETE DETAIL. THE POST SHALL INCLUDE AN INTERNAL PERMANENTLY BONDED STRUCTURAL STIFFNER TO MINIMIZE DEFLECTION AFTER INSTALLATION.

DIMENSIONS
THE POST SHALL BE 18'-0" IN HEIGHT WITH A 5" SHAFT WITH A 3" X 6" TALL TENON. THE BASE SHALL BE
19" X 161#2" TALL.

INSTALLATION
POST PROVIDED WITH (4)3#4" HOT DIP GALVANIZED STEEL L-TYPE ANCHOR BOLTS WITH SPECIAL WASHERS (TRAF-3140). A HANDHOLE LOCATED AS SHOWN IN THE BASE TO PROVIDE ANCHORAGE AND WIRING ACCESS.

FINISH
DARK BRONZE

ANCHORAGE DETAIL

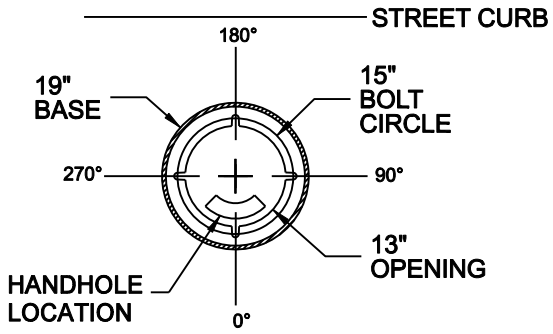

NO SCALE

MINNEAPOLIS DEPARTMENT OF PUBLIC WORKS		STANDARD - ST LIGHT M-18' ALUMINUM W/ BANNER REFERENCE PLATES: TRAF-3140, TRAF-3360	STANDARD PLATE NO. TRAF-3288-R1
DRAWN: LPK	DATE: 12/7/11		
APPROVED: DRP	DATE: 12/7/11		