Official Publication No. 8357

Date: 10/5/16

Procurement Division
330 2nd Ave South, Room 552
Minneapolis, MN 55401

Buyer Information:
Traci Reimringer / 612-673-2176
Traci.Reimringer@minneapolismn.gov

AN AFFIRMATIVE ACTION EMPLOYER

ADDENDUM NO. 1
"BIDS FOR PRE-CAST REINFORCED CONCRETE BOX CULVERTS FOR COMO AVE. SURGE CHAMBER"

The plans were inadvertently not included in the bid packet and are now a part of Addendum No. 1

This addendum should be acknowledged on your bid form.

Bid date and time remain the same

Finance and Property Services – Procurement Division
City of Minneapolis

CITY OF MINNEAPOLIS DEPARTMENT OF PUBLIC WORKS

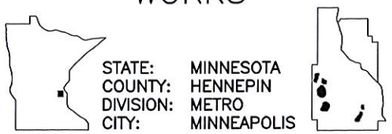

STATE: MINNESOTA
COUNTY: HENNEPIN
DIVISION: METRO
CITY: MINNEAPOLIS

PROJECT NAME: COMO AVE. SURGE CHAMBER DETAILED DESIGN
MPLS PROJECT NUMBER: CSW1411STCOMSCD
LOCATION: SOUTHEAST MINNEAPOLIS NEAR INTERSECTION OF COMO AVE./25TH AVE. AND ALONG 25TH AVE. TO WEEKS AVE.

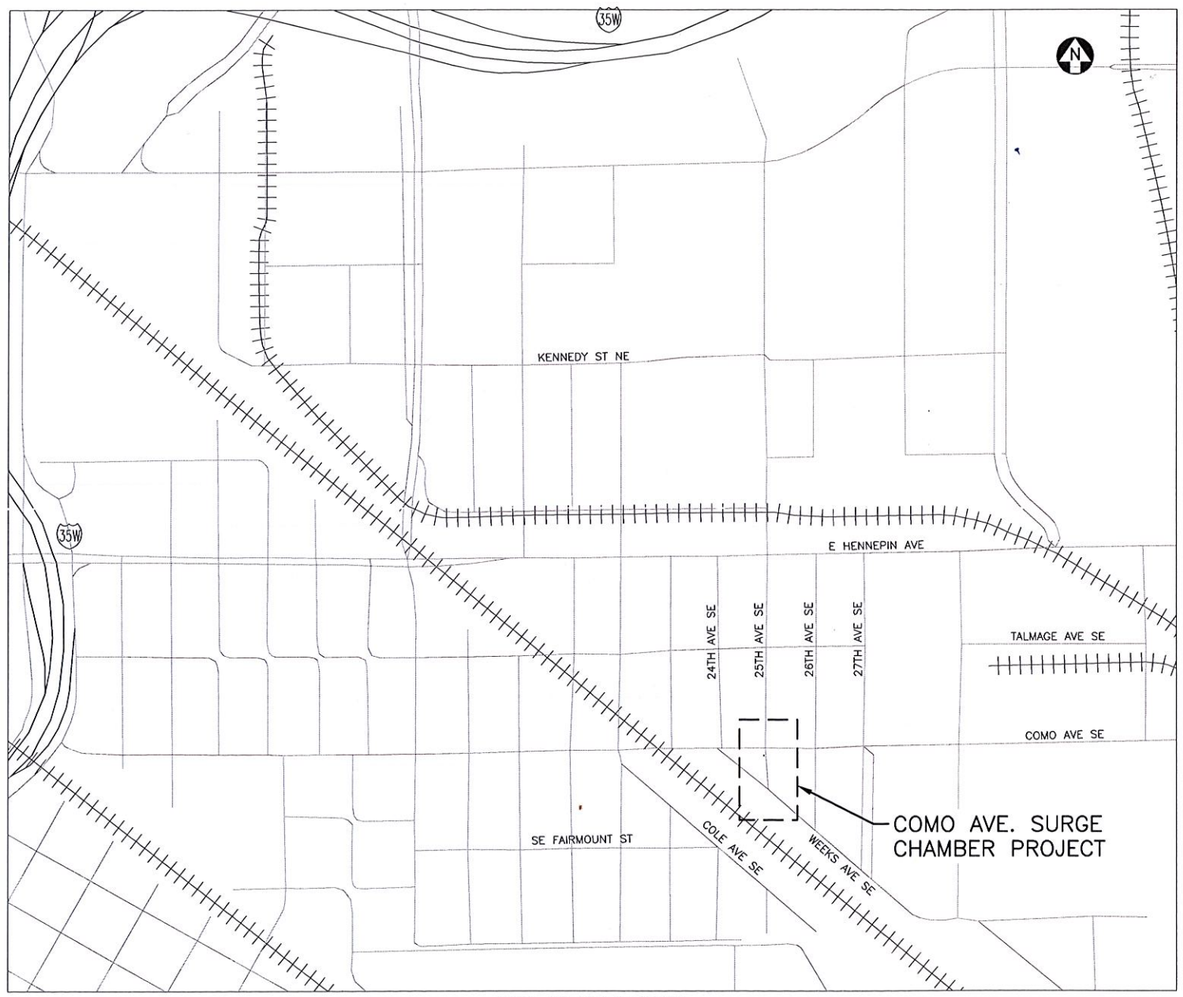

CITY OF MINNEAPOLIS

GOVERNING SPECIFICATIONS

THE 2016 EDITION OF THE MINNESOTA DEPARTMENT OF TRANSPORTATION "STANDARD SPECIFICATIONS FOR CONSTRUCTION" SHALL GOVERN.

ALL TRAFFIC CONTROL DEVICES AND SIGNING SHALL CONFORM AND BE INSTALLED IN ACCORDANCE TO THE MMUTCD PART VI, INCLUDING FIELD MANUAL FOR TEMPORARY TRAFFIC CONTROL ZONE LAYOUTS.

INDEX

DWG. NO.	DESCRIPTION
G1	TITLE SHEET
G2	ESTIMATED QUANTITIES
	SURGE CHAMBER
C1	EXISTING SITE & UTILITY PLAN
C2	PAVEMENT, CONCRETE SHAFT & STORM SEWER REMOVALS
C3	SURGE CHAMBER – PLAN & PROFILE
C4	BOX CULVERT RISERS & PAVEMENT PLANS
C5	C-I-P SHAFT GEOMETRY – PLANS
C6	C-I-P SHAFT GEOMETRY – ELEVATIONS
C7	C-I-P SHAFT GEOMETRY – ELEVATIONS
C8	C-I-P SHAFT REINFORCEMENT – PLANS
C9	C-I-P SHAFT REINFORCEMENT – PLANS
C10	C-I-P SHAFT REINFORCEMENT – ELEVATIONS
C11	C-I-P SHAFT REINFORCEMENT – PLAN & SECTIONS
C12	DEFLECTOR PLATE – PLANS, SECTIONS & DETAILS
C13	MISCELLANEOUS STEEL – SECTION & DETAILS
C14	PRECAST CONCRETE BOX CULVERT – BARREL DETAILS (SPECIAL DESIGN)
C15	PRECAST CONCRETE BOX CULVERT – SUMP & END BULKHEAD DETAILS
C16	C-I-P RISER & TRENCH GRATE – PLAN, SECTIONS & DETAILS
C17	C-I-P PAVEMENT REINFORCEMENT – PLAN & DETAILS
P1	STORM SEWER – PLAN & PROFILE
P2	STANDARD DETAILS
T1	TEMPORARY TRAFFIC CONTROL PLAN
B1	BORING LOGS
	REFERENCE DRAWINGS
R1	C-I-P SHAFT CONSTRUCTION SEQUENCE SCHEMATICS (ISOMETRIC VIEWS)
R2	C-I-P SHAFT CONSTRUCTION SEQUENCE SCHEMATICS (ISOMETRIC VIEWS)
R3	C-I-P SHAFT CONSTRUCTION SEQUENCE SCHEMATICS (ISOMETRIC VIEWS)
	MNDOT – STANDARD PLAN 5-297.221 (1 OF 2): PAVEMENT JOINTS
	MNDOT – STANDARD PLAN 5-297.221 (2 OF 2): PAVEMENT JOINTS

THIS PLAN WAS PREPARED UNDER THE SUPERVISION OF JOSEPH A. WELNA, P.E., BARR ENGINEERING COMPANY.

Lisa K. Cerney — APPROVED: MINNEAPOLIS CITY ENGINEER OR DEPUTY CITY ENGINEER	10/3/2016 DATE
Joe Hartzer — APPROVED: DIRECTOR, TRAFFIC & PARKING SERVICES	10/3/16 DATE
Mike Eaton — APPROVED: DIRECTOR, TRANSPORTATION ENGINEERING & DESIGN	10/3/16 DATE
Michael Abeln — APPROVED: DIRECTOR, TRANSPORTATION MAINTENANCE & REPAIR	10/3/16 DATE
Jennifer Hager — APPROVED: DIRECTOR, TRANSPORTATION PLANNING & PROGRAMMING	10·3·16 DATE
Katrina Kessler — APPROVED: DIRECTOR, SURFACE WATER & SEWERS	10/3/16 DATE
Gerald Gerdes — APPROVED: DIRECTOR, WATER TREATMENT & DISTRIBUTION	10/4/2016 DATE

HYDRAULIC DESIGN DATA:

GEYSER FORCE AT TOP OF ACCESS SHAFT: 100K
MIN. STORAGE VOLUME: 4,510 CF
MIN. GRATED OPEN AREA: 144 SF

HORIZONTAL DATA
HENNEPIN COUNTY COORDINATE SYSTEM
DATUM: NAD83, 1986 ADJUSTMENT (NON HARN)
UNITS: US SURVEY FEET

VERTICAL DATA
DATUM: NGVD29

ISSUE FOR CONSTRUCTION

NO.	BY	CHK.	APP.	DATE	REVISION DESCRIPTION

I HEREBY CERTIFY THAT THIS PLAN, SPECIFICATION, OR REPORT WAS PREPARED BY ME OR UNDER MY DIRECT SUPERVISION AND THAT I AM A DULY LICENSED PROFESSIONAL ENGINEER UNDER THE LAWS OF THE STATE OF MINNESOTA.

PRINTED NAME Joe A. Welna
SIGNATURE
DATE 9/29/16 LICENSE # 49911

RELEASED TO/FOR	A	B	C	0	1	2	3
CLIENT							
BID							
CONSTRUCTION				9/29/16			

DATE RELEASED

BARR
Corporate Headquarters: Minneapolis, Minnesota Ph: 1-800-632-2277

Project Office:
BARR ENGINEERING CO.
4300 MARKETPOINTE DRIVE
Suite 200
MINNEAPOLIS, MN 55435
Ph: 1-800-632-2277
Fax: (952) 832-2601
www.barr.com

Scale	AS SHOWN
Date	6/30/2016
Drawn	JMW
Checked	JAW2
Designed	PKN
Approved	JAW2

MINNEAPOLIS PUBLIC WORKS
MINNEAPOLIS, MINNESOTA

COMO AVENUE SURGE CHAMBER
MINNEAPOLIS, MINNESOTA

TITLE SHEET

BARR PROJECT No. 23/27-1478.00
CLIENT PROJECT No. CSW1411STCOMSCD
DWG. No. G1
REV. No. 0

CADD USER: Joe A. Welna FILE: M:\DESIGN\23271478.00\23271478.00_G01.DWG PLOT SCALE: 1:2 PLOT DATE: 9/30/2016 10:35 AM

STATEMENT OF ESTIMATED QUANTITIES

TAB.	DWG. NO.	ITEM NO.	ITEM	UNIT	TOTAL ESTIMATED QUANTITIES
		2021.501	MOBILIZATION (1)	LUMP SUM	1
	C2	2101.502	CLEARING	TREE	1
	C2	2101.511	GRUBBING	TREE	1
	C2	2104.501	REMOVE SEWER PIPE (STORM)	LIN FT	19
	C2	2104.501	REMOVE CURB & GUTTER	LIN FT	266
	C2	2104.503	REMOVE CONCRETE SIDEWALK	SQ FT	181
	C2	2104.505	REMOVE BITUMINOUS PAVEMENT	SQ YD	28
	C2	2104.505	REMOVE CONCRETE PAVEMENT	SQ YD	285
	C2	2104.509	REMOVE CONCRETE STRUCTURE	EACH	1
	C2	2104.509	REMOVE CATCH BASIN	EACH	1
	C5	2402.601	STAINLESS STEEL (316L) LINER & EMBEDDED PLATES	LUMP SUM	1
	C5	2402.601	DEFLECTOR PLATE (6)	LUMP SUM	1
	C3	2406.5530	BRIDGE APPROACH PANELS (13)	SQ YD	113
	C3, C5	2411.501	STRUCTURAL CONCRETE (3B52) (8) (9)	CU YD	81
	C5	2411.511	STRUCTURAL EXCAVATION CLASS E (P)	CU YD	145
	C5	2411.511	GRANULAR BACKFILL (CV) (P)	CU YD	83
	C5	2411.541	REINFORCEMENT BARS	POUND	5,420
	C3, C5	2411.601	REINFORCEMENT BARS (EPOXY COATED)	POUND	11,375
	C3	2412.511	10x7 PRECAST CONCRETE BOX CULVERT (2) (7)	LIN FT	111
	C3	2412.511	10x10 PRECAST CONCRETE BOX CULVERT (5)	LIN FT	6
	C3	2451.501	STRUCTURAL EXCAVATION CLASS E (P)	CU YD	660
	C3	2451.501	GRANULAR BACKFILL (CV) (P)	CU YD	230
	P1	2503.511	10" PVC PIPE SEWER (3)	LIN FT	5
	P1	2503.511	15" RC PIPE CULVERT CLASS V (3)	LIN FT	12
	P1	2506.502	CONST DRAINAGE STRUCTURE DESIGN F (MOD) (4)	EACH	1
	C3	2506.516	CASTING ASSEMBLY (12)	EACH	68
	C3	2520.501	LEAN MIX BACKFILL (10)	CU YD	33
	T1	2563.601	TRAFFIC CONTROL	LUMP SUM	1
	P1	2573.601	TEMPORARY EROSION CONTROL (11)	LUMP SUM	1

NOTES:

1. ALL UTILITY COORDINATION (XCEL, GAS, WATER, FIBER OPTIC, PHONE) IS INCIDENTAL TO MOBILIZATION
2. INTEGRAL BULKHEAD CONSIDERED INCIDENTAL TO THIS ITEM.
3. ALL PIPE SEWER AND PIPE CULVERT UNIT COSTS INCLUDE ALL EXCAVATION, BEDDING, COMPACTION, BACKFILL & FITTINGS
4. INCLUDES MANHOLE STRUCTURE, CASTING, GRATE, COMPLETE
5. INTEGRAL SUMP WALLS INCIDENTAL.
6. DEFLECTOR PLATE LOCKING SYSTEM INCIDENTAL TO DEFLECTOR PLATE
7. ALL CAST–IN–PLACE DOWELS AT OPENINGS & END PIECE ARE INCIDENTAL TO THIS ITEM.
8. CONCRETE ADJUSTING RINGS, MH FRAME & COVER AT C–I–P SHAFT CONSIDERED INCIDENTAL TO THIS ITEM.
9. WATERSTOP INCIDENTAL
10. PLACE LEAN MIX BACKFILL OVER 10 FT. WIDTH BETWEEN C–I–P RISERS.
11. INLET PROTECTION REQUIRED AT ALL CATCH BASIN LOCATIONS.
12. 4 – 24" LONG NEENAH GRATES & FRAMES, R–4999–L7, REQUIRED AT 17 LOCATIONS.
13. BRIDGE APPROACH PANEL INCLUDES C–I–P PAVEMENT W/ INTEGRAL GRATES. QUANTITY DOES NOT INCLUDE DEDUCTION FOR GRATE OPENINGS. CONCRETE (MNDOT MIX 3S52) VOLUME APPROX. 34 CY.

ISSUE FOR CONSTRUCTION

NO.	BY	CHK.	APP.	DATE	REVISION DESCRIPTION

I HEREBY CERTIFY THAT THIS PLAN, SPECIFICATION, OR REPORT WAS PREPARED BY ME OR UNDER MY DIRECT SUPERVISION AND THAT I AM A DULY LICENSED PROFESSIONAL ENGINEER UNDER THE LAWS OF THE STATE OF MINNESOTA.

PRINTED NAME Joe A. Weina
SIGNATURE
DATE 9/29/16 LICENSE # 49911

RELEASED TO/FOR	A	B	C	0	1	2	3
CLIENT							
BID							
CONSTRUCTION				9/29/16			

DATE RELEASED

BARR
Corporate Headquarters: Minneapolis, Minnesota Ph: 1–800–632–2277
Project Office:
BARR ENGINEERING CO.
4300 MARKETPOINTE DRIVE
Suite 200
MINNEAPOLIS, MN 55435
Ph: 1–800–632–2277
Fax: (952) 832–2601
www.barr.com

Scale	AS SHOWN
Date	6/30/2016
Drawn	MJJ
Checked	JAW2
Designed	PKN
Approved	JAW2

MINNEAPOLIS PUBLIC WORKS
MINNEAPOLIS, MINNESOTA

COMO AVE. SURGE CHAMBER
DETAILED DESIGN

ESTIMATED QUANTITIES

BARR PROJECT No. 23/27–1478.00
CLIENT PROJECT No. CSW1411STCOMSCD
DWG. No. G2
REV. No. 0

CADD USER: Max J. Jouppe FILE: M:\DESIGN\23271478.00\23271478.00_G02.DWG PLOT SCALE: 1:2 PLOT DATE: 9/29/2016 9:29 AM

REFERENCE POINTS⑥			
POINT	NORTHING	EASTING	TOP OF ROADWAY ELEVATION
M	171759.005	542846.709	860.51
N	171759.262	542837.084	860.26
O	171631.114	542845.668	861.13
P	171631.211	542835.761	861.07

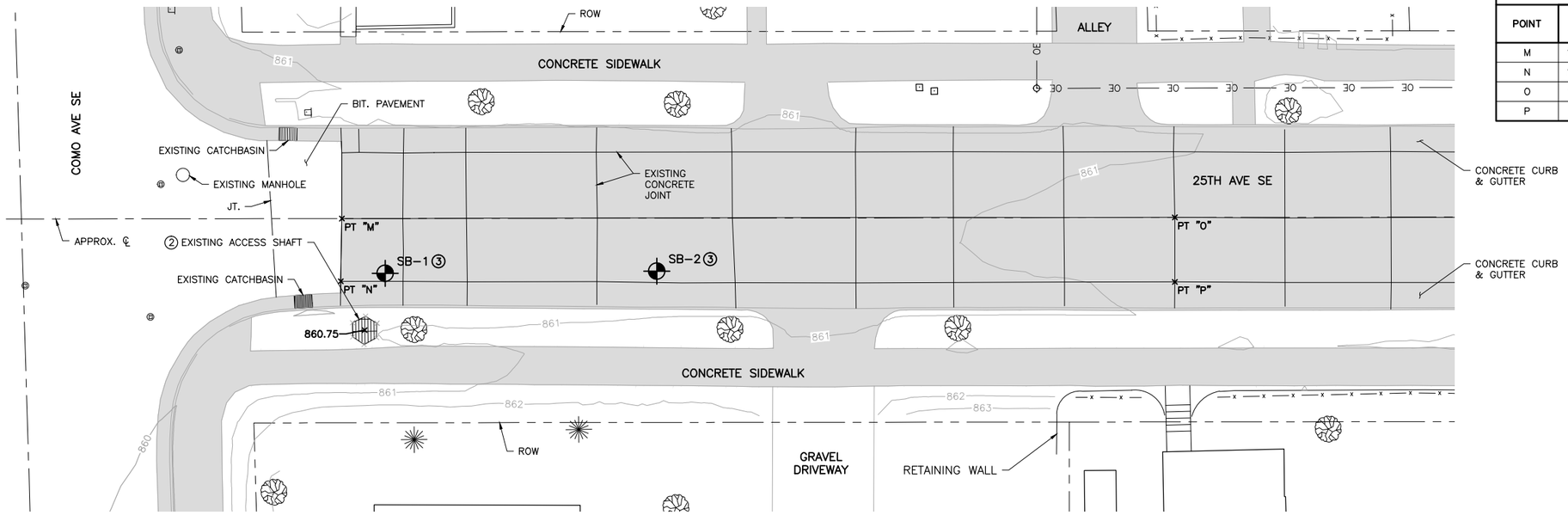

1 PLAN: EXISTING ABOVE GROUND CONDITIONS①⑤⑥

0 10 20
HORZ. SCALE IN FEET

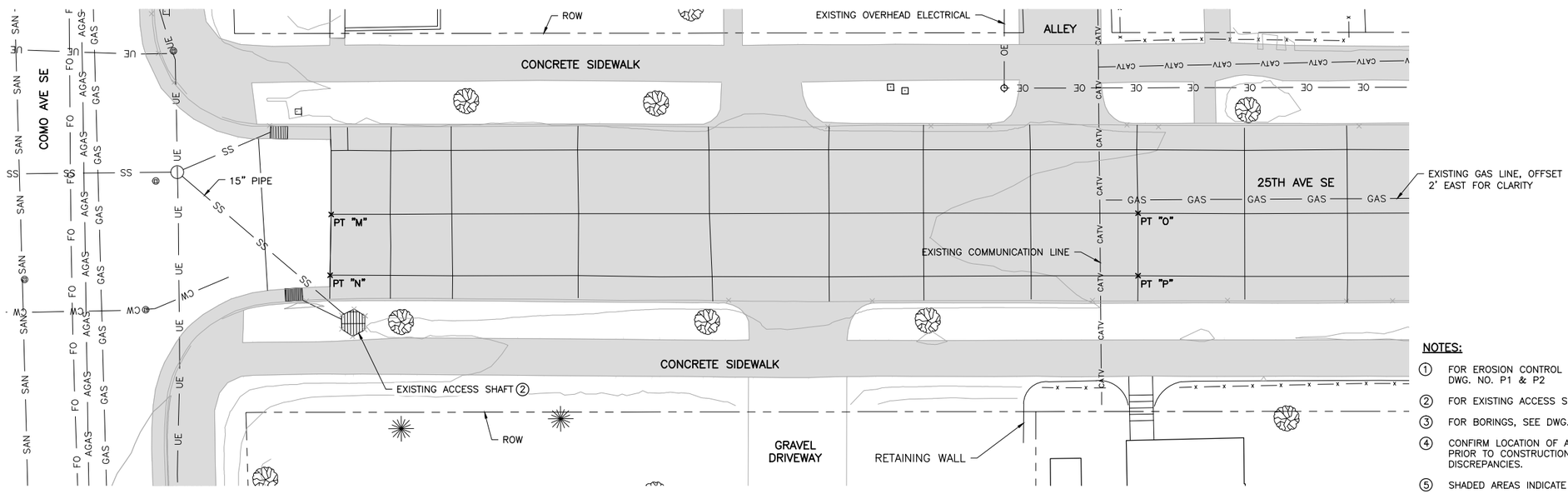

2 PLAN: EXISTING CONDITIONS W/ UNDERGROUND UTILITIES④⑤⑥

0 10 20
HORZ. SCALE IN FEET

NOTES:

1. FOR EROSION CONTROL NOTES AND DETAILS, SEE DWG. NO. P1 & P2
2. FOR EXISTING ACCESS SHAFT, SEE DWG. NO. C2
3. FOR BORINGS, SEE DWG. NO. B1
4. CONFIRM LOCATION OF ALL UNDERGROUND UTILITIES PRIOR TO CONSTRUCTION. NOTIFY OWNER OF ANY DISCREPANCIES.
5. SHADED AREAS INDICATE CONCRETE SURFACES
6. REFERENCE POINTS BASED ON EDGES OF EXISTING CONCRETE PAVEMENT AT ROADWAY CENTERLINE AND AT CURB & GUTTER.

ISSUE FOR CONSTRUCTION

NO.	BY	CHK.	APP.	DATE	REVISION DESCRIPTION

I HEREBY CERTIFY THAT THIS PLAN, SPECIFICATION, OR REPORT WAS PREPARED BY ME OR UNDER MY DIRECT SUPERVISION AND THAT I AM A DULY LICENSED PROFESSIONAL ENGINEER UNDER THE LAWS OF THE STATE OF MINNESOTA.

PRINTED NAME Joe A. Weina
SIGNATURE
DATE 9/29/16 LICENSE # 49911

RELEASED TO/FOR	A	B	C	0	1	2	3
CLIENT							
BID							
CONSTRUCTION				9/29/16			

DATE RELEASED

BARR
Corporate Headquarters: Minneapolis, Minnesota Ph: 1-800-632-2277

Project Office:
BARR ENGINEERING CO.
4300 MARKETPOINTE DRIVE
Suite 200
MINNEAPOLIS, MN 55435
Ph: 1-800-632-2277
Fax: (952) 832-2601
www.barr.com

Scale	AS SHOWN
Date	7/18/2016
Drawn	MJJ
Checked	JPH
Designed	PKN
Approved	PKN

CITY OF MINNEAPOLIS
MINNEAPOLIS, MINNESOTA

COMO AVENUE SURGE CHAMBER
MINNEAPOLIS, MINNESOTA

EXISTING SITE & UTILITY PLAN

BARR PROJECT No. 23/27-1478.00
CLIENT PROJECT No. CSW1411STCOMSCD
DWG. No. C1
REV. No. 0

CADD USER: Max J. Jouppe FILE: M:\DESIGN\23271478.00\23271478.00_C01.DWG PLOT SCALE: 1:2 PLOT DATE: 9/29/2016 9:49 AM

SUMMARY OF PAVEMENT & STORM SEWER REMOVAL QUANTITIES

CLEARING	1	TREE
GRUBBING	1	TREE
REMOVE BITUMINOUS PAVEMENT	28	SQ YD
REMOVE CONCRETE STRUCTURE	1	LUMP SUM
REMOVE CONCRETE PAVEMENT	285	SQ YD
REMOVE CURB & GUTTER	266	LIN FT
REMOVE SIDEWALK	181	SQ FT
REMOVE CATCH BASIN	1	EA
REMOVE SEWER PIPE (STORM)	19	LIN FT

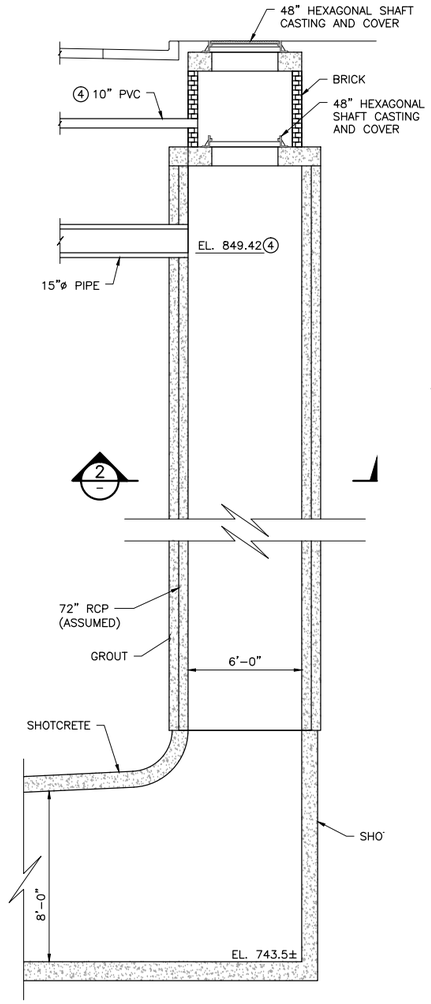

1 DETAIL: EXISTING ACCESS SHAFT ②
N.T.S.

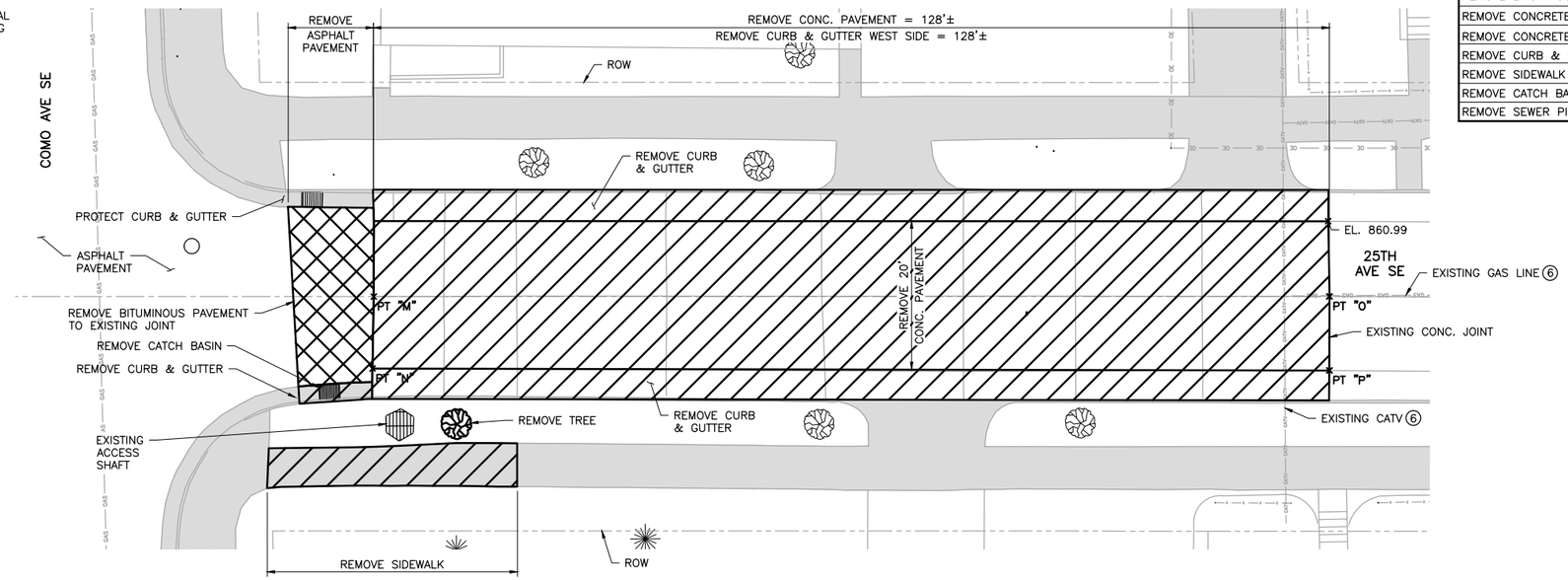

3 PLAN: PAVEMENT REMOVALS ①③⑦
0 10 20
SCALE IN FEET

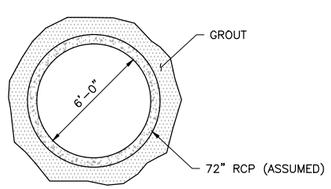

2 SECTION: EXISTING ACCESS SHAFT
N.T.S.

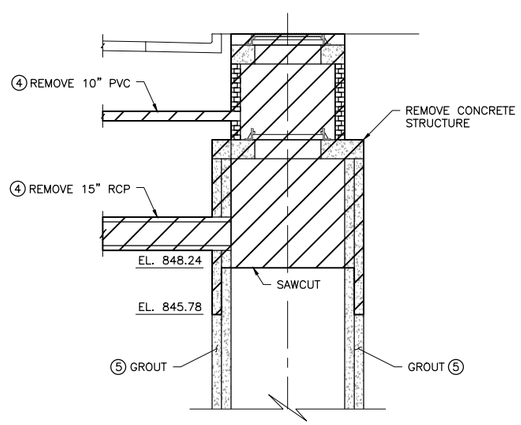

4 DETAIL: EXISTING ACCESS SHAFT CONCRETE REMOVALS
N.T.S.

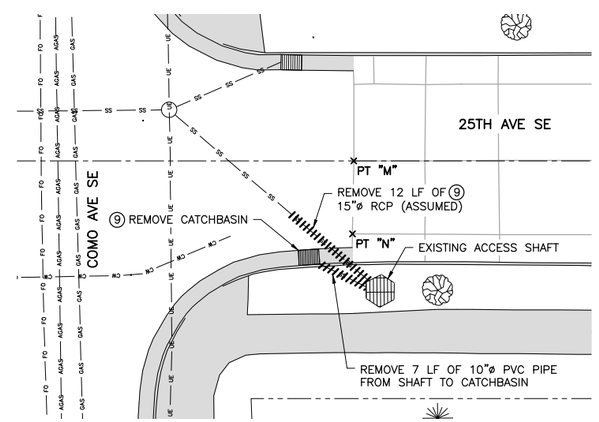

5 PLAN: STORM SEWER REMOVALS ③⑦⑧
0 10 20
SCALE IN FEET

NOTES:

1. FOR EXISTING UNDERGROUND UTILITIES, SEE DWG. NO. C1
2. AS-BUILT OF EXISTING ORIGINAL WORK SHAFT NOT AVAILABLE.
3. FOR REFERENCE POINT COORDINATES & ELEVATIONS, SEE DWG. NO. C1
4. ELEVATION OF 15"ø & 10"ø PIPE IS APPROXIMATE.
5. REMOVE ANY GROUT AROUND UPPER SHAFT CONCRETE TO 12" BELOW NEW SURGE CHAMBER FOOTING (B.O.F. EL. 846.78)
6. CITY TO COORDINATE UTILITY RELOCATIONS.
   CONTACTS:
   CENTERPOINT ENERGY – MS. ALLA DENISOVA (612) 321-5077
   CENTURY LINK – STEVE HOPPE (651) 312-5671
7. FOR EROSION CONTROL, SEE DWG. NO. P1 & P2.
8. PROVIDE BYPASS PUMPING AS NECESSARY.
9. FOR NEW STORM SEWER STRUCTURES, SEE DWG. NO. P1.

ISSUE FOR CONSTRUCTION

NO.	BY	CHK.	APP.	DATE	REVISION DESCRIPTION

I HEREBY CERTIFY THAT THIS PLAN, SPECIFICATION, OR REPORT WAS PREPARED BY ME OR UNDER MY DIRECT SUPERVISION AND THAT I AM A DULY LICENSED PROFESSIONAL ENGINEER UNDER THE LAWS OF THE STATE OF MINNESOTA.

PRINTED NAME Joe A. Weina
SIGNATURE
DATE 9/29/16 LICENSE # 49911

RELEASED TO/FOR	A	B	C	0	1	2	3
CLIENT							
BID							
CONSTRUCTION				9/29/16			

DATE RELEASED

BARR
Corporate Headquarters: Minneapolis, Minnesota Ph: 1-800-632-2277

Project Office:
BARR ENGINEERING CO.
4300 MARKETPOINTE DRIVE
Suite 200
MINNEAPOLIS, MN 55435
Ph: 1-800-632-2277
Fax: (952) 832-2601
www.barr.com

Scale	AS SHOWN
Date	7/18/2016
Drawn	MJJ
Checked	
Designed	
Approved	

MINNEAPOLIS PUBLIC WORKS
MINNEAPOLIS, MINNESOTA

COMO AVENUE SURGE CHAMBER
DETAILED DESIGN

PAVEMENT, CONCRETE SHAFT & STORM SEWER REMOVALS

BARR PROJECT No. 23/27-1478.00
CLIENT PROJECT No. CSW1411STCOMSCD
DWG. No. C2
REV. No. 0

CADD USER: Max J. Jouppe FILE: M:\DESIGN\23271478.00\23271478.00_C02.DWG PLOT SCALE: 1:2 PLOT DATE: 9/29/2016 9:45 AM

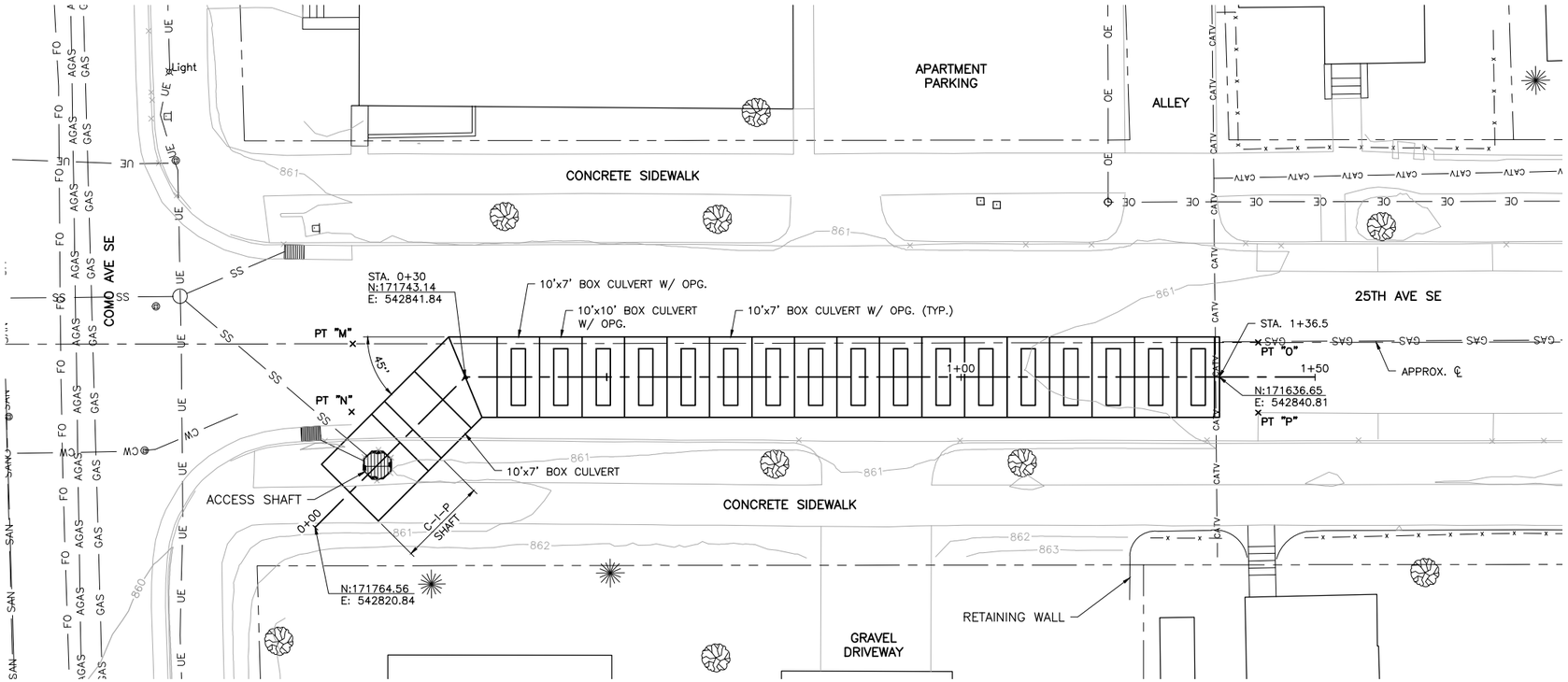

1 PLAN: COMO AVENUE SURGE CHAMBER ①⑤⑨

0 10 20
HORZ. SCALE IN FEET

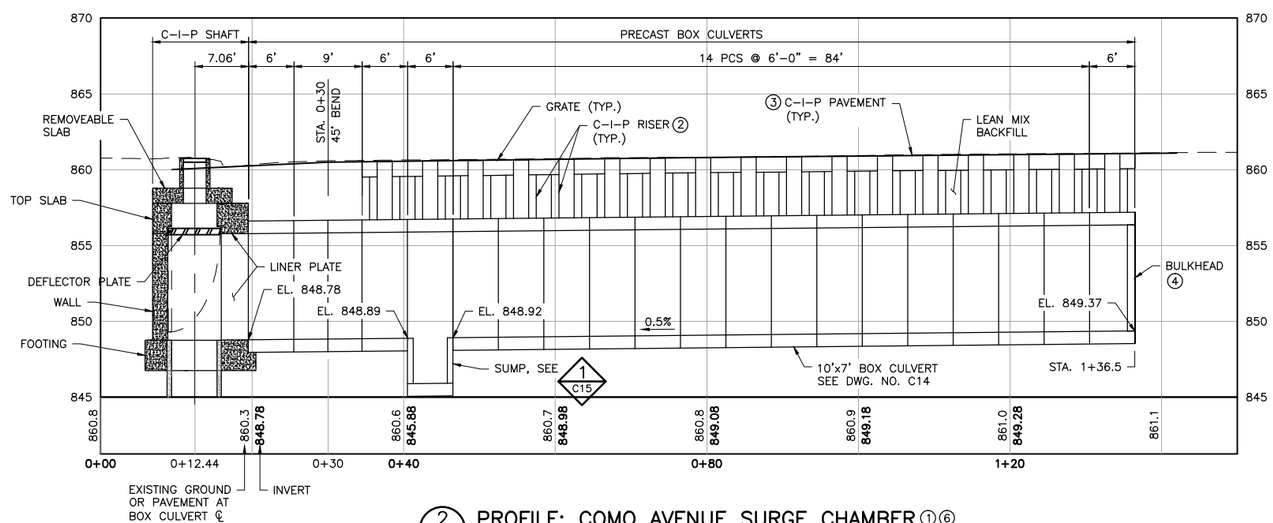

2 PROFILE: COMO AVENUE SURGE CHAMBER ①⑥

0 10 20
HORZ. SCALE IN FEET

0 5 10
VERT. SCALE IN FEET

SUMMARY OF STORM SEWER, RISER & PAVEMENT QUANTITIES

10'x7' PRECAST CONCRETE BOX CULVERT	15	LIN FT
10'x7' PRECAST CONCRETE BOX CULVERT W/ OPG.	90	LIN FT
10'x7' PRECAST CONCRETE BOX CULVERT W/ B.H.	6	LIN FT
10'x10' PRECAST CONCRETE BOX CULVERT W/ SUMP	6	LIN FT
STRUCTURAL EXCAVATION CLASS E (P)	660	CU YD
GRANULAR BACKFILL (CV) (P)	230	CU YD
LEAN MIX BACKFILL ⑧	33	CU YD
STRUCTURAL CONCRETE (3B52)	41	CU YD
REINFORCEMENT BAR (EPOXY)	10,110	LBS
CASTING ASSEMBLY	68	EA
BRIDGE APPROACH PANELS ⑦	113	SQ YD

NOTES:

① FOR SURGE CHAMBER COMPONENTS:
- A. C-I-P SHAFT, SEE DWG. NO. C5-C11
- B. DEFLECTOR PLATE, SEE DWG. NO. C12-C13
- C. LINER & EMBEDDED PLATES, SEE DWG. NO. C13
- D. PRECAST BOX CULVERTS, SEE DWG. NO. C14-C15
- E. C-I-P RISERS, SEE DWG. NO. C16
- F. C-I-P PAVEMENT W/ INTEGRAL GRATES, SEE DWG. NO. C17

② FOR C-I-P RISER LOCATIONS, SEE DWG. NO. C4

③ FOR C-I-P CONCRETE PAVEMENT W/ INTERGRAL GRATES, SEE DWG. NO. C4

④ FOR BOX CULVERT W/ END BULKHEAD, SEE DWG. NO. C15.

⑤ RISER, GRATES & PAVEMENT JOINTS NOT SHOWN FOR CLARITY.

⑥ CONTROL WATER AS NECESSARY FOR CONSTRUCTION.

⑦ BRIDGE APPROACH PANELS INCLUDES C-I-P PAVEMENT W/ INTEGRAL GRATES, QUANTITY DOES NOT INCLUDE OPENINGS. CONCRETE VOLUME APPROX. 34 CY

⑧ FOR LEAN MIX BACKFILL REQUIREMENTS, SEE MNDOT SPEC. 2520.

⑨ FOR REFERENCE POINT COORDINATES & ELEVATIONS, SEE DWG. NO. C1.

ISSUE FOR CONSTRUCTION

NO.	BY	CHK.	APP.	DATE	REVISION DESCRIPTION

I HEREBY CERTIFY THAT THIS PLAN, SPECIFICATION, OR REPORT WAS PREPARED BY ME OR UNDER MY DIRECT SUPERVISION AND THAT I AM A DULY LICENSED PROFESSIONAL ENGINEER UNDER THE LAWS OF THE STATE OF MINNESOTA.

PRINTED NAME Paul K. Nielsen
SIGNATURE
DATE 9/29/16 LICENSE # 19006

RELEASED TO/FOR	A	B	C	0	1	2	3
CLIENT							
BID							
CONSTRUCTION				9/29/16			

DATE RELEASED

BARR
Corporate Headquarters: Minneapolis, Minnesota Ph: 1-800-632-2277

Project Office:
BARR ENGINEERING CO.
4300 MARKETPOINTE DRIVE
Suite 200
MINNEAPOLIS, MN 55435
Ph: 1-800-632-2277
Fax: (952) 832-2601
www.barr.com

Scale	AS SHOWN
Date	7/18/2016
Drawn	MJJ
Checked	JPH
Designed	PKN
Approved	PKN

CITY OF MINNEAPOLIS
MINNEAPOLIS, MINNESOTA

COMO AVENUE SURGE CHAMBER
MINNEAPOLIS, MINNESOTA

SURGE CHAMBER
PLAN & PROFILE

BARR PROJECT No. 23/27-1478.00
CLIENT PROJECT No. CSW1411STCOMSCD
DWG. No. C3
REV. No. 0

CADD USER: Max J. Jouppe FILE: M:\DESIGN\23271478.00\23271478.00_C03.DWG PLOT SCALE: 1:2 PLOT DATE: 9/29/2016 2:08 PM

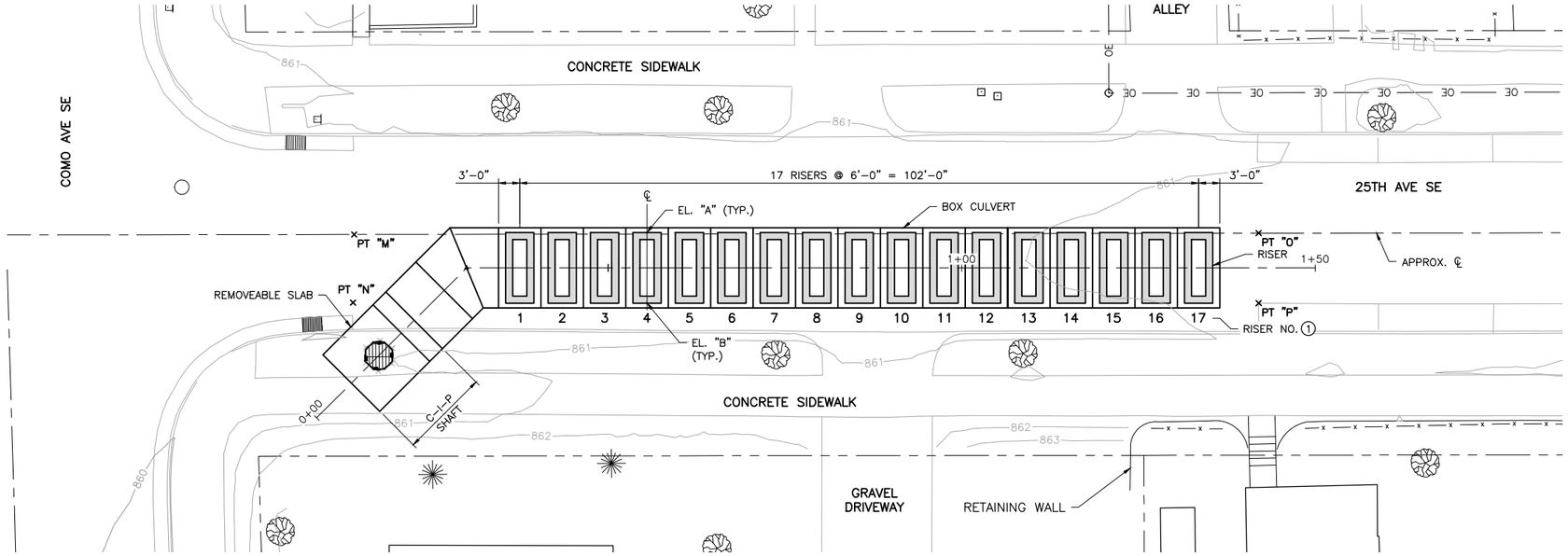

1 PLAN: BOX CULVERT RISERS ②⑤

0 10 20
HORZ. SCALE IN FEET

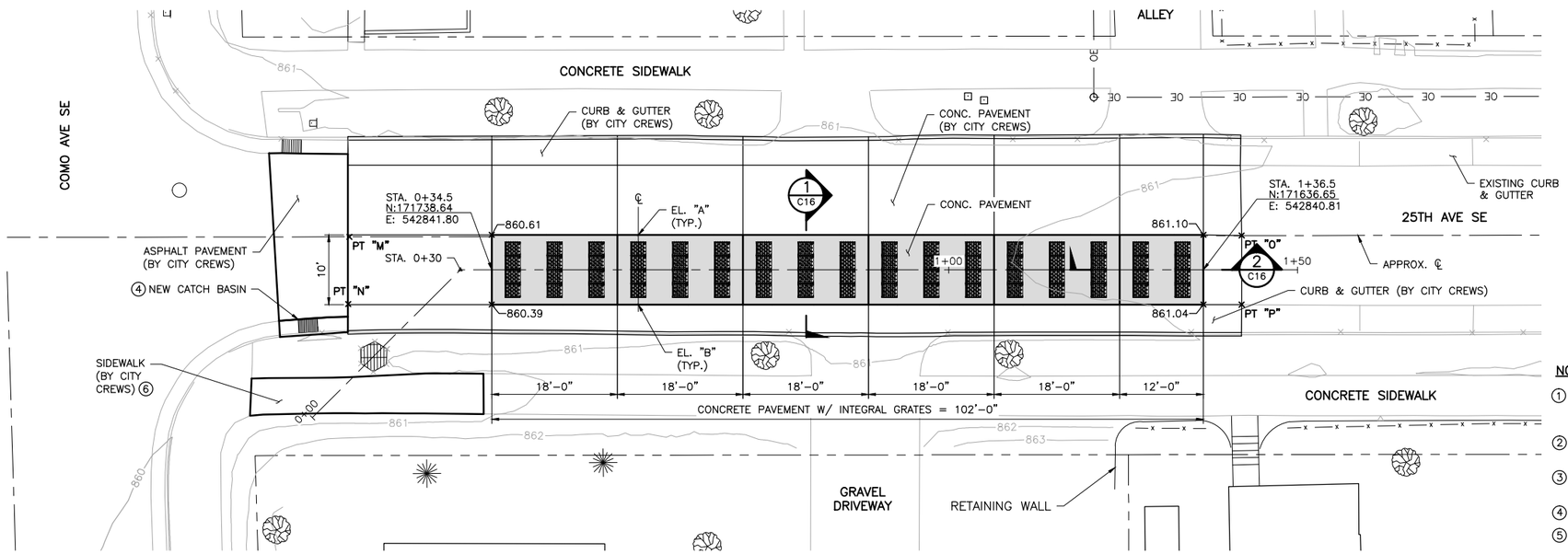

2 PLAN: CONCRETE PAVEMENT W/ INTEGRAL GRATES ②③⑤

0 10 20
HORZ. SCALE IN FEET

NOTES:

1. EL. "A" & "B" LOCATED ALONG ℄ OF RISER AT FINAL PAVEMENT ELEVATIONS. FOR C-I-P RISER DIMENSIONS & REINFORCEMENT, SEE DWG. NO. C16
2. SHADED AREAS INDICATE C-I-P CONC. TO BE PLACED DURING WINTER CONSTRUCTION.
3. FOR PAVEMENT JOINTS & REINFORCEMENT, SEE DWG. NO. C17.
4. FOR CATCH BASIN, SEE DWG. NO. P1
5. FOR REFERENCE POINT COORDINATES & ELEVATIONS, SEE DWG. NO. C1
6. SIDEWALK REPLACEMENT TO COMPLY WITH 2010 ADA STANDARDS FOR ACCESSIBILITY DESIGN.

ISSUE FOR CONSTRUCTION

NO.	BY	CHK.	APP.	DATE	REVISION DESCRIPTION

I HEREBY CERTIFY THAT THIS PLAN, SPECIFICATION, OR REPORT WAS PREPARED BY ME OR UNDER MY DIRECT SUPERVISION AND THAT I AM A DULY LICENSED PROFESSIONAL ENGINEER UNDER THE LAWS OF THE STATE OF MINNESOTA.

PRINTED NAME Paul K. Nielsen
SIGNATURE
DATE 9/29/16 LICENSE # 19006

RELEASED TO/FOR	A	B	C	0	1	2	3
CLIENT							
BID							
CONSTRUCTION				9/29/16			

DATE RELEASED

BARR
Corporate Headquarters: Minneapolis, Minnesota Ph: 1-800-632-2277
Project Office:
BARR ENGINEERING CO.
4300 MARKETPOINTE DRIVE
Suite 200
MINNEAPOLIS, MN 55435
Ph: 1-800-632-2277
Fax: (952) 832-2601
www.barr.com

Scale	AS SHOWN
Date	7/18/2016
Drawn	MJJ
Checked	JPH
Designed	PKN
Approved	PKN

CITY OF MINNEAPOLIS
MINNEAPOLIS, MINNESOTA

COMO AVENUE SURGE CHAMBER
MINNEAPOLIS, MINNESOTA

BOX CULVERT RISERS & PAVEMENT PLAN

BARR PROJECT No. 23/27-1478.00
CLIENT PROJECT No. CSW1411STCOMSCD
DWG. No. C4
REV. No. 0

CADD USER: Max J. Jouppe FILE: M:\DESIGN\23271478.00\23271478000_C04.DWG PLOT SCALE: 1:2 PLOT DATE: 9/29/2016 10:13 AM

SUMMARY OF C–I–P SHAFT QUANTITIES

STRUCTURAL CONCRETE (3B52)	40	CY
REINFORCEMENT BAR	5,420	LBS
REINFORCEMENT BAR (EPOXY)	1,265	LBS
STAINLESS STEEL (316L) LINER & EMBEDDED PLATES ⑧	1	LUMP SUM
DEFLECTOR PLATE ⑧	1	LUMP SUM
STRUCTURAL EXCAVATION, CLASS E (P)	145	CY
GRANULAR BACKFILL (CV) (P)	83	CY

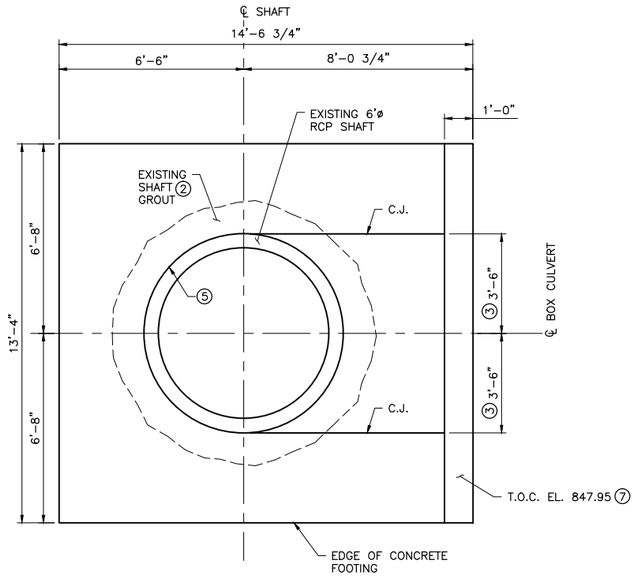

① PLAN: FOOTING EL. 848.25 ⑨

0 1 2 3 4 5 6
SCALE

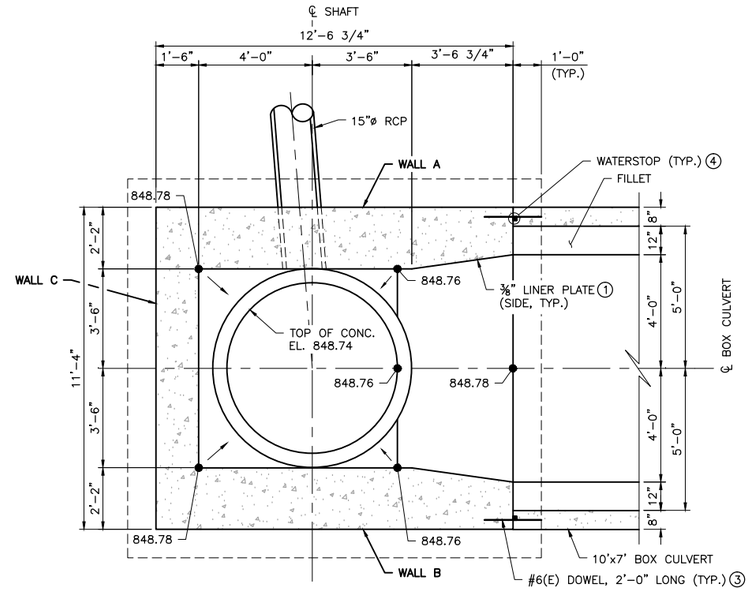

② PLAN: WALLS EL. 854.0 ⑨

0 1 2 3 4 5 6
SCALE

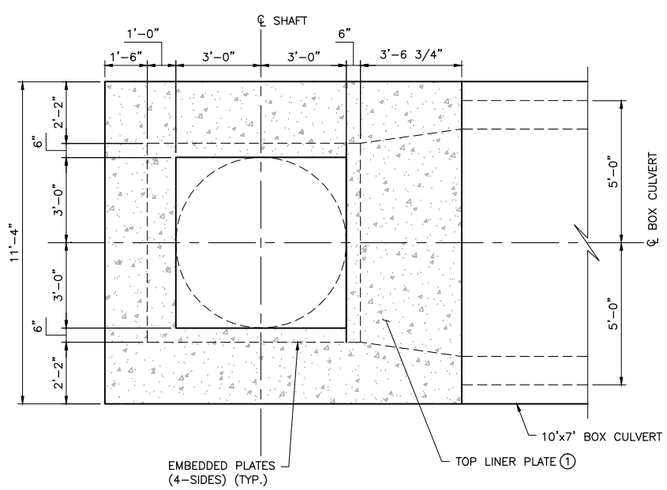

③ PLAN: TOP SLAB EL. 857.0 ⑨

0 1 2 3 4 5 6
SCALE

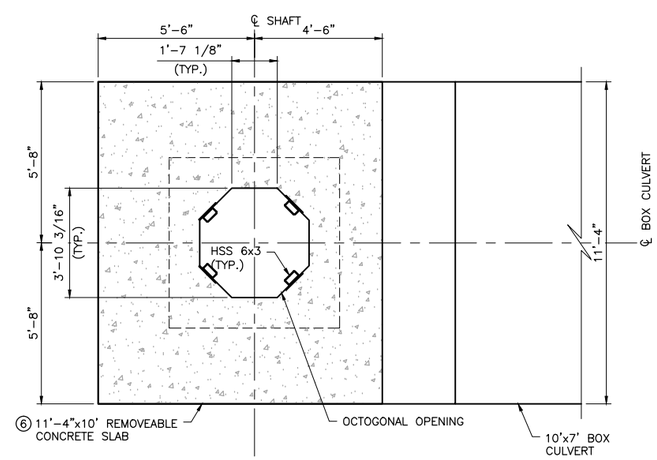

④ PLAN: REMOVEABLE SLAB EL. 858.5 ⑨

0 1 2 3 4 5 6
SCALE

NOTES:

① ⅜" LINER PLATE ALONG 3–SIDES. TOP & BOTH SIDES OF CHAMBER OPENING TO BOX CULVERT, SEE DETAILS 1 & 2 ON DWG. NO. C13.

② IF EXISTING SHAFT GROUT PRESENT, REMOVE 12" BELOW BOTTOM OF FOOTING, SEE DWG. NO. C2.

③ #6 DOWELS @ 12" O.C. MAX. CAST DOWELS W/ 10'x7' BOX CULVERT END PIECE. DOWELS AT BOX CULVERT BASE TO FIT WITHIN 7'–0" WIDTH OF C.J.

④ WATERSTOP: CETCO RX–101 OR EQUAL

⑤ PROVIDE BOND BREAKER W/ BUILDING PAPER AROUND PERIMETER OF EXISTING SHAFT AND SURGE CHAMBER FOOTING.

⑥ FOR LOCATION OF HSS 6x3 LOCK SYSTEM TUBES, SEE DETAIL 5 ON DWG. NO. C13.

⑦ MATCH FINAL BOX CULVERT BASE THICKNESS. ELEVATION SHOWN BASED ON T_b =10". SEE DWG. NO. C6 & C14.

⑧ FOR STAINLESS STEEL LINER, EMBEDDED & DEFLECTOR PLATES, SEE DWG. NO. C12 & C13.

⑨ FOR ISOMETRIC VIEWS OF C–I–P SHAFT CONSTRUCTION SEQUENCING, SEE REF. DWG. R1–R3.

ISSUE FOR CONSTRUCTION

NO.	BY	CHK.	APP.	DATE	REVISION DESCRIPTION

I HEREBY CERTIFY THAT THIS PLAN, SPECIFICATION, OR REPORT WAS PREPARED BY ME OR UNDER MY DIRECT SUPERVISION AND THAT I AM A DULY LICENSED PROFESSIONAL ENGINEER UNDER THE LAWS OF THE STATE OF MINNESOTA.

PRINTED NAME Paul K. Nielsen
SIGNATURE
DATE 9/29/16 LICENSE # 19006

RELEASED TO/FOR	A	B	C	0	1	2	3
CLIENT							
BID							
CONSTRUCTION				9/29/16			

DATE RELEASED

BARR
Corporate Headquarters: Minneapolis, Minnesota Ph: 1–800–632–2277
Project Office:
BARR ENGINEERING CO.
4300 MARKETPOINTE DRIVE
Suite 200
MINNEAPOLIS, MN 55435
Ph: 1–800–632–2277
Fax: (952) 832–2601
www.barr.com

Scale	AS SHOWN
Date	7/18/2016
Drawn	MJJ
Checked	JPH
Designed	PKN
Approved	PKN

CITY OF MINNEAPOLIS
MINNEAPOLIS, MINNESOTA

COMO AVENUE SURGE CHAMBER
MINNEAPOLIS, MINNESOTA

C–I–P SHAFT GEOMETRY
PLANS

BARR PROJECT No. 23/27–1478.00
CLIENT PROJECT No. CSW1411STCOMSCD
DWG. No. C5
REV. No. 0

CADD USER: Max J. Jouppe FILE: M:\DESIGN\23271478.00\23271478.00_C05.DWG PLOT SCALE: 1:2 PLOT DATE: 9/29/2016 10:25 AM

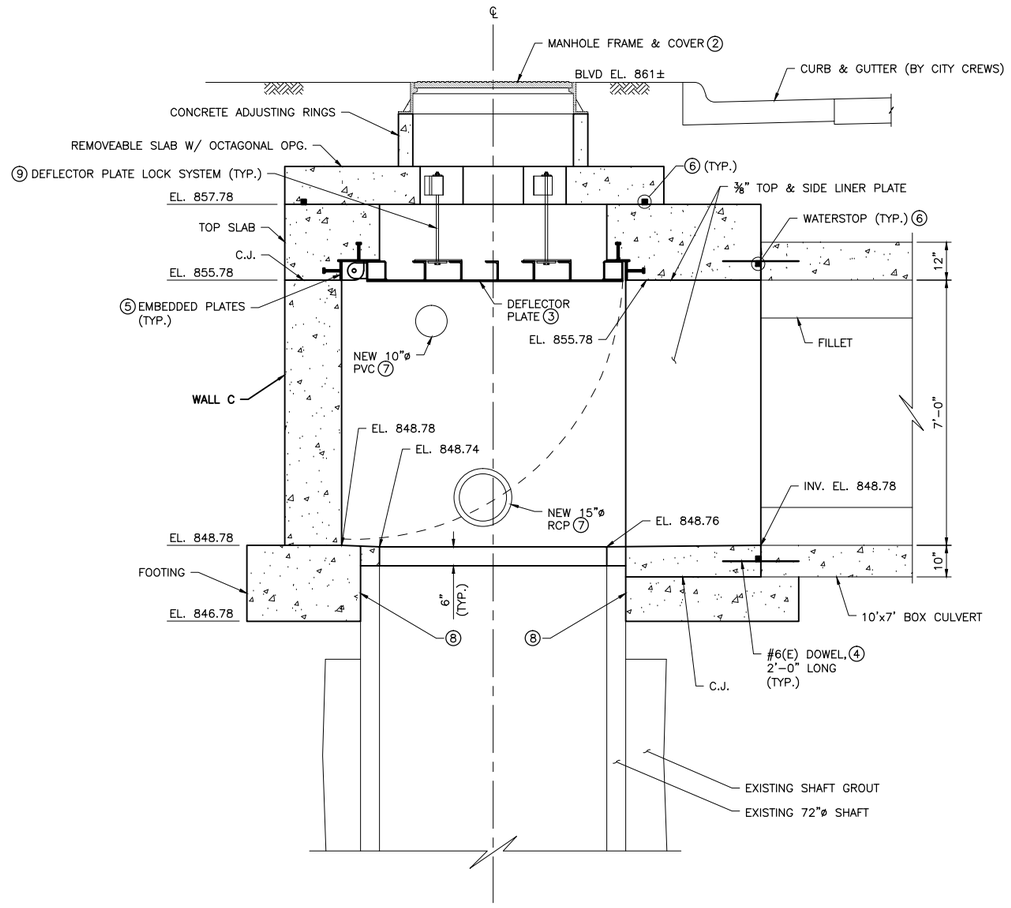

1 ELEVATION: C-I-P SHAFT (LOOKING NORTHEAST AT WALL A) ①

0 1 2 3 4 5
SCALE

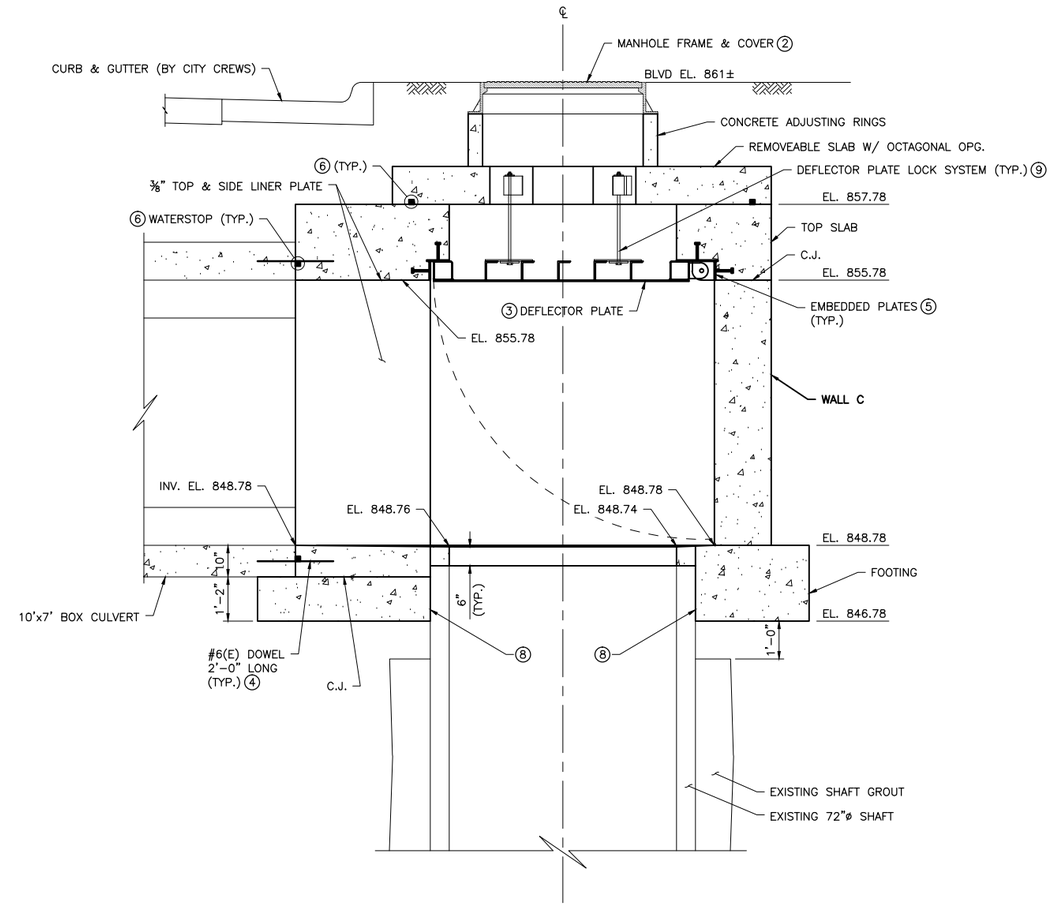

2 ELEVATION: C-I-P SHAFT (LOOKING SOUTHWEST AT WALL B) ①

0 1 2 3 4 5
SCALE

NOTES:

1. ELEVATION VIEW IS FROM INSIDE CHAMBER
2. MANHOLE FRAME & COVER: NEENAH R-1740-F
3. FOR DEFLECTOR PLATE, SEE DWG. NO. C12.
4. #6 DOWELS @ 12" O.C. MAX. CAST DOWELS W/ 10'x7' BOX CULVERT END PIECE. DOWELS AT BOX CULVERT BASE TO FIT WITHIN 7'-0" POUR BETWEEN C.J.
5. FOR EMBEDDED PLATE & LINER PLATE DETAILS, SEE ON DWG. NO. C13.
6. WATERSTOP: CETCO RX-101 OR EQUAL
7. WATERTIGHT PIPE CONNECTION PER STANDARD PLATE NO. SEWR-3001.
8. PROVIDE BOND BREAKER W/ BUILDING PAPER AROUND PERIMETER OF EXISTING SHAFT AND SURGE CHAMBER FOOTING.
9. SEE DETAILS 5, 6 & 7 ON DWG. NO. C13

ISSUE FOR CONSTRUCTION

NO.	BY	CHK.	APP.	DATE	REVISION DESCRIPTION

I HEREBY CERTIFY THAT THIS PLAN, SPECIFICATION, OR REPORT WAS PREPARED BY ME OR UNDER MY DIRECT SUPERVISION AND THAT I AM A DULY LICENSED PROFESSIONAL ENGINEER UNDER THE LAWS OF THE STATE OF MINNESOTA.

PRINTED NAME Paul K. Nielsen
SIGNATURE
DATE 9/29/16 LICENSE # 19006

RELEASED TO/FOR	A	B	C	0	1	2	3
CLIENT							
BID							
CONSTRUCTION				9/29/16			

DATE RELEASED

BARR
Corporate Headquarters: Minneapolis, Minnesota Ph: 1-800-632-2277

Project Office:
BARR ENGINEERING CO.
4300 MARKETPOINTE DRIVE
Suite 200
MINNEAPOLIS, MN 55435
Ph: 1-800-632-2277
Fax: (952) 832-2601
www.barr.com

Scale	AS SHOWN
Date	7/18/2016
Drawn	MJJ
Checked	JPH
Designed	PKN
Approved	PKN

CITY OF MINNEAPOLIS
MINNEAPOLIS, MINNESOTA

COMO AVENUE SURGE CHAMBER
MINNEAPOLIS, MINNESOTA

C-I-P SHAFT GEOMETRY
ELEVATIONS

BARR PROJECT No. 23/27-1478.00
CLIENT PROJECT No. CSW1411STCOMSCD
DWG. No. C6
REV. No. 0

CADD USER: Max J. Jouppe FILE: M:\DESIGN\23271478.00\23271478.00_C06.DWG PLOT SCALE: 1:2 PLOT DATE: 9/29/2016 10:30 AM

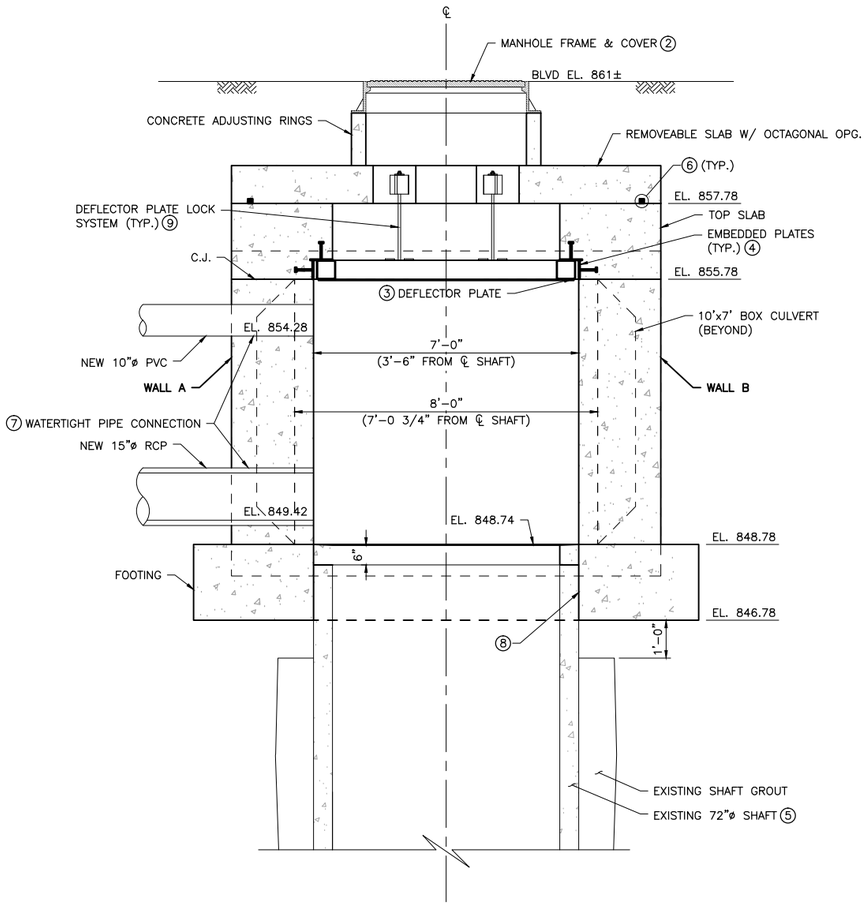

1 ELEVATION: C-I-P SHAFT (LOOKING SOUTHEAST AT OPENING TO BOX CULVERT) ①

0 1 2 3 4 5
SCALE

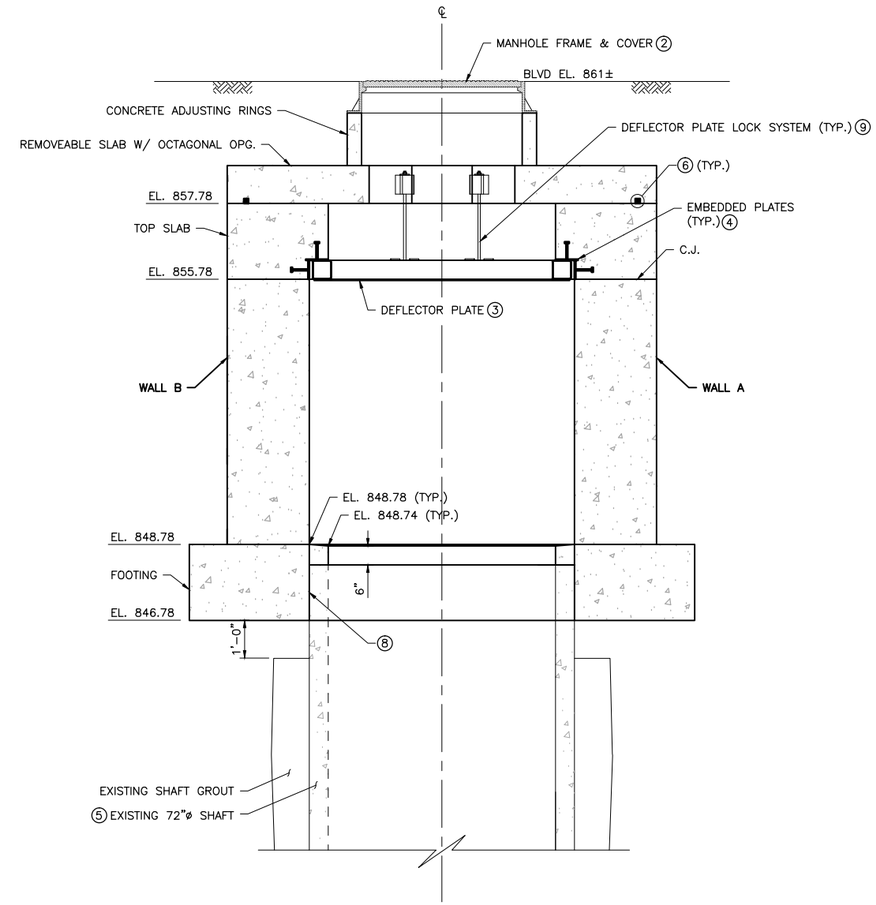

2 ELEVATION: C-I-P SHAFT (LOOKING NORTHWEST AT WALL C) ①

0 1 2 3 4 5
SCALE

NOTES:

1. ELEVATION VIEW IS FROM INSIDE CHAMBER
2. MANHOLE FRAME & COVER: NEENAH R-1740-F
3. FOR DEFLECTOR PLATE, SEE DWG. NO. C12
4. FOR EMBEDDED PLATES, SEE DETAIL 4 ON DWG. NO. C13
5. ASSUMED 72" RCP SHAFT WALL THICKNESS 6". ADJUSTMENT OF FOOTING DIMENSIONS MAY BE REQUIRED TO AVOID BEARING SURGE CHAMBER ON EXISTING SHAFT WALL.
6. WATERSTOP: CETCO RX-101 OR EQUAL
7. WATERTIGHT PIPE CONNECTION PER STANDARD PLATE NO. SEWR-3001.
8. PROVIDE BOND BREAKER W/ BUILDING PAPER AROUND PERIMETER OF EXISTING SHAFT AND SURGE CHAMBER FOOTING.
9. SEE DETAILS 5, 6 & 7 ON DWG. NO. C13.

ISSUE FOR CONSTRUCTION

NO.	BY	CHK.	APP.	DATE	REVISION DESCRIPTION

I HEREBY CERTIFY THAT THIS PLAN, SPECIFICATION, OR REPORT WAS PREPARED BY ME OR UNDER MY DIRECT SUPERVISION AND THAT I AM A DULY LICENSED PROFESSIONAL ENGINEER UNDER THE LAWS OF THE STATE OF MINNESOTA.

PRINTED NAME Paul K. Nielsen
SIGNATURE
DATE 9/29/16 LICENSE # 19006

RELEASED TO/FOR	A	B	C	0	1	2	3
CLIENT							
BID							
CONSTRUCTION				9/29/16			

DATE RELEASED

BARR
Corporate Headquarters: Minneapolis, Minnesota Ph: 1-800-632-2277

Project Office:
BARR ENGINEERING CO.
4300 MARKETPOINTE DRIVE
Suite 200
MINNEAPOLIS, MN 55435
Ph: 1-800-632-2277
Fax: (952) 832-2601
www.barr.com

Scale	AS SHOWN
Date	7/18/2016
Drawn	MJJ
Checked	JPH
Designed	PKN
Approved	PKN

CITY OF MINNEAPOLIS
MINNEAPOLIS, MINNESOTA

COMO AVENUE SURGE CHAMBER
MINNEAPOLIS, MINNESOTA

C-I-P SHAFT GEOMETRY
ELEVATIONS

BARR PROJECT No. 23/27-1478.00
CLIENT PROJECT No. CSW1411STCOMSCD
DWG. No. C7
REV. No. 0

CADD USER: Max J. Jouppe FILE: M:\DESIGN\23271478.00\23271478.00_C07.DWG PLOT SCALE: 1:2 PLOT DATE: 9/29/2016 10:32 AM

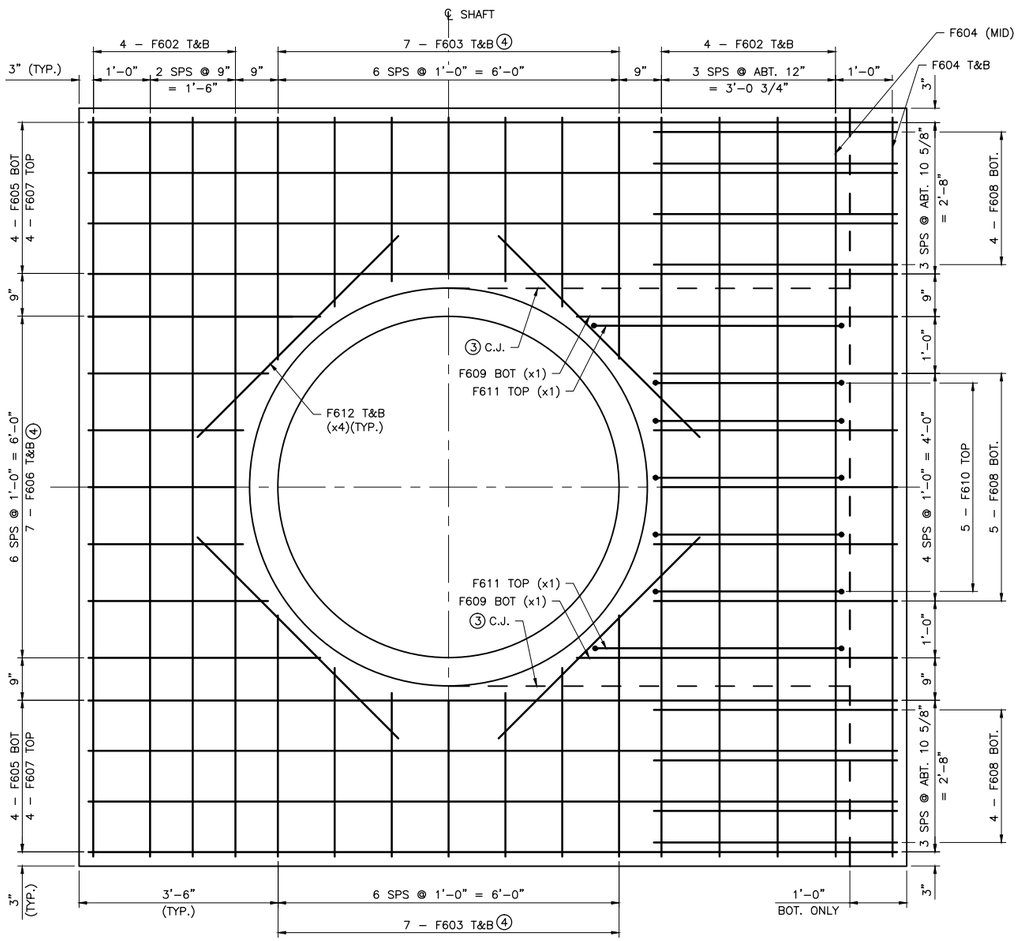

1 – PLAN: FOOTING REINFORCEMENT (BOTTOM MAT SHOWN) ①②

0 1 2 3
SCALE

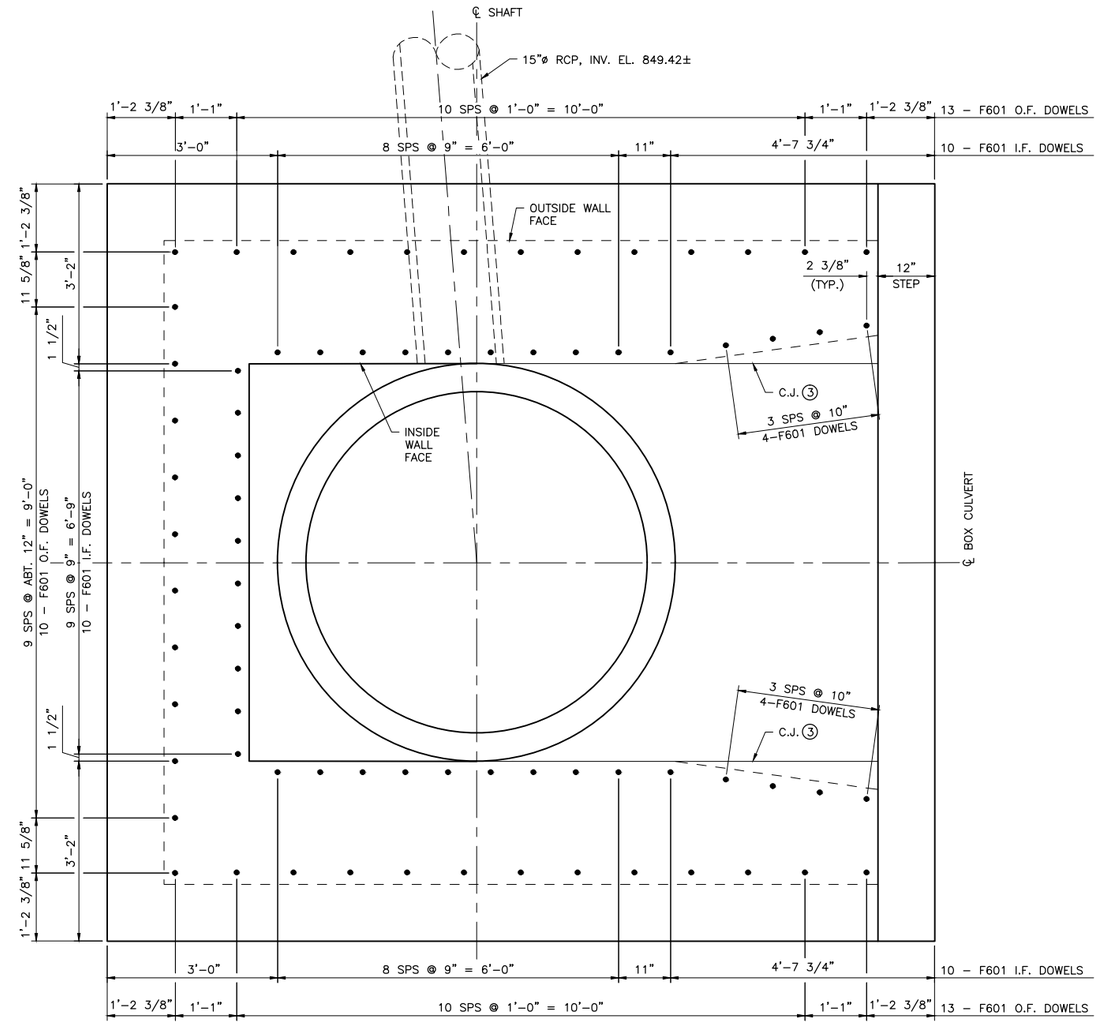

2 – PLAN: FOOTING DOWELS (TOP OF FOOTING, EL. 848.78)

0 1 2 3
SCALE

NOTES:

1. TOP REINFORCEMENT SIMILAR. FOOTING DOWELS NOT SHOWN FOR CLARITY.
2. TOP & BOTTOM = T&B, OUTSIDE FACE = O.F., INSIDE FACE = I.F.
3. FOR CONSTRUCTION JOINT LOCATIONS, SEE DWG. NO. C6 & C7
4. BAR LENGTH VARIES, FIELD CUT AS NECESSARY TO FIT AROUND EXISTING SHAFT.

ISSUE FOR CONSTRUCTION

NO.	BY	CHK.	APP.	DATE	REVISION DESCRIPTION

I HEREBY CERTIFY THAT THIS PLAN, SPECIFICATION, OR REPORT WAS PREPARED BY ME OR UNDER MY DIRECT SUPERVISION AND THAT I AM A DULY LICENSED PROFESSIONAL ENGINEER UNDER THE LAWS OF THE STATE OF MINNESOTA.

PRINTED NAME Paul K. Nielsen
SIGNATURE
DATE 9/29/16 LICENSE # 19006

RELEASED TO/FOR	A	B	C	0	1	2	3
CLIENT							
BID							
CONSTRUCTION				9/29/16			

DATE RELEASED

BARR
Corporate Headquarters: Minneapolis, Minnesota Ph: 1–800–632–2277

Project Office:
BARR ENGINEERING CO.
4300 MARKETPOINTE DRIVE
Suite 200
MINNEAPOLIS, MN 55435
Ph: 1–800–632–2277
Fax: (952) 832–2601
www.barr.com

Scale	AS SHOWN
Date	7/18/2016
Drawn	MJJ
Checked	JPH
Designed	PKN
Approved	PKN

CITY OF MINNEAPOLIS
MINNEAPOLIS, MINNESOTA

COMO AVENUE SURGE CHAMBER
MINNEAPOLIS, MINNESOTA

C–I–P SHAFT REINFORCEMENT PLANS

BARR PROJECT No. 23/27–1478.00
CLIENT PROJECT No. CSW1411STCOMSCD
DWG. No. C8
REV. No. 0

CADD USER: Max J. Jouppe FILE: M:\DESIGN\23271478.00\23271478.00_C08.DWG PLOT SCALE: 1:2 PLOT DATE: 9/29/2016 2:10 PM

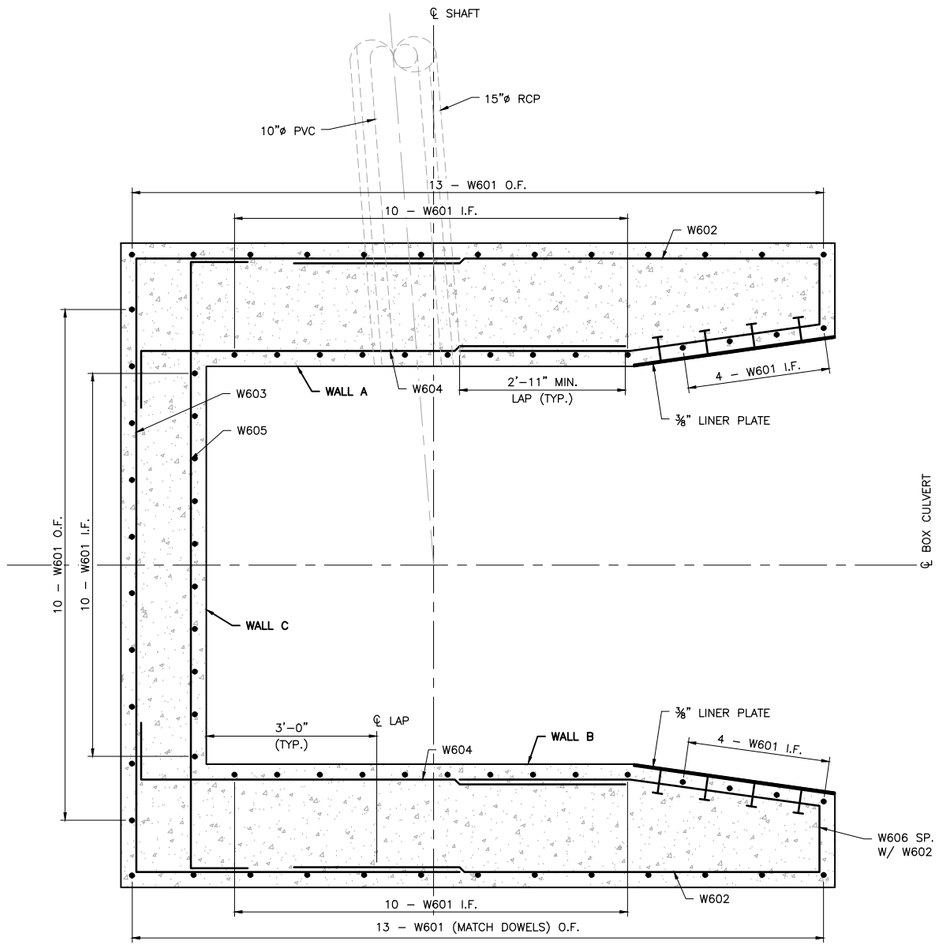

1 PLAN: WALL REINFORCEMENT ①

0 1 2 3
SCALE

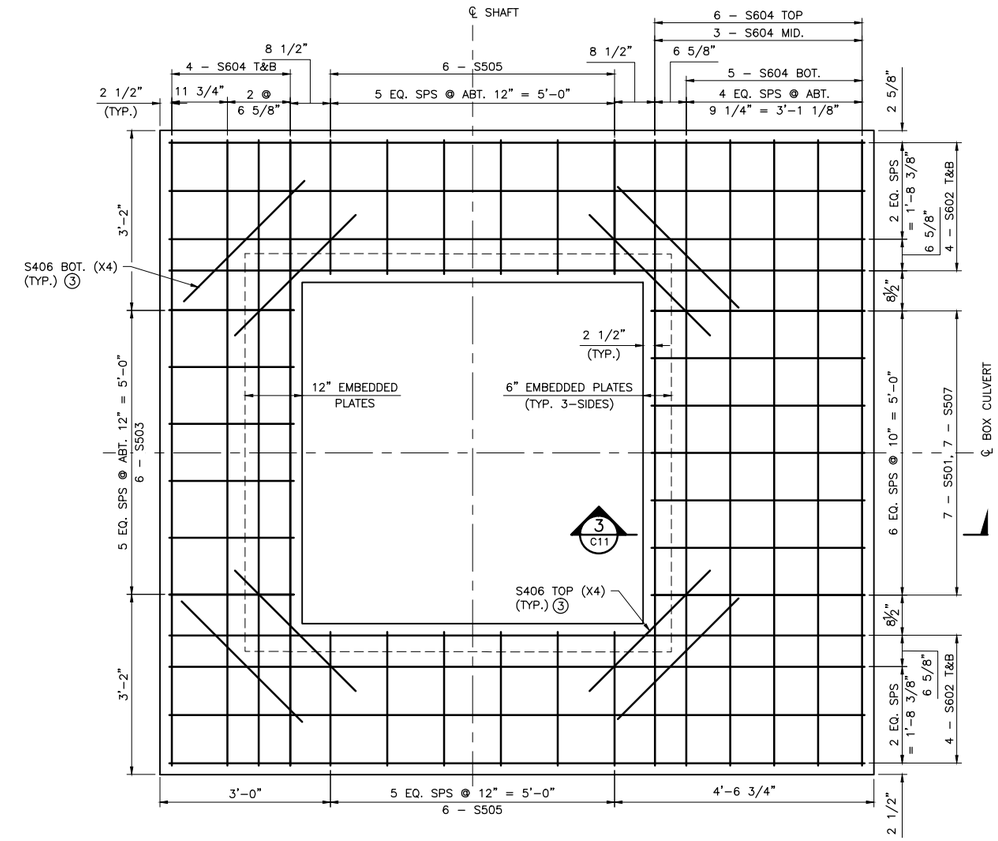

2 PLAN: TOP SLAB REINFORCEMENT ②

0 1 2 3
SCALE

NOTES:

① MATCH W601 SPACING WITH FOOTING DOWELS, F601

② VERTICAL BARS FROM WALL NOT SHOWN FOR CLARITY.

③ INSTALL CORNER BAR W/ 2" CL. FROM CORNER OF CONCRETE

ISSUE FOR CONSTRUCTION

NO.	BY	CHK.	APP.	DATE	REVISION DESCRIPTION

I HEREBY CERTIFY THAT THIS PLAN, SPECIFICATION, OR REPORT WAS PREPARED BY ME OR UNDER MY DIRECT SUPERVISION AND THAT I AM A DULY LICENSED PROFESSIONAL ENGINEER UNDER THE LAWS OF THE STATE OF MINNESOTA.

PRINTED NAME Paul K. Nielsen
SIGNATURE
DATE 9/29/16 LICENSE # 19006

RELEASED TO/FOR	A	B	C	0	1	2	3
CLIENT							
BID							
CONSTRUCTION				9/29/16			

DATE RELEASED

BARR
Corporate Headquarters: Minneapolis, Minnesota Ph: 1–800–632–2277

Project Office:
BARR ENGINEERING CO.
4300 MARKETPOINTE DRIVE
Suite 200
MINNEAPOLIS, MN 55435
Ph: 1–800–632–2277
Fax: (952) 832–2601
www.barr.com

Scale	AS SHOWN
Date	7/18/2016
Drawn	MJJ
Checked	JPH
Designed	PKN
Approved	PKN

CITY OF MINNEAPOLIS
MINNEAPOLIS, MINNESOTA

COMO AVENUE SURGE CHAMBER
MINNEAPOLIS, MINNESOTA

C–I–P SHAFT REINFORCEMENT PLANS

BARR PROJECT No. 23/27–1478.00
CLIENT PROJECT No. CSW1411STCOMSCD
DWG. No. C9
REV. No. 0

CADD USER: Max J. Jouppe FILE: M:\DESIGN\23271478.00\23271478.00_C09.DWG PLOT SCALE: 1:2 PLOT DATE: 9/29/2016 11:09 AM

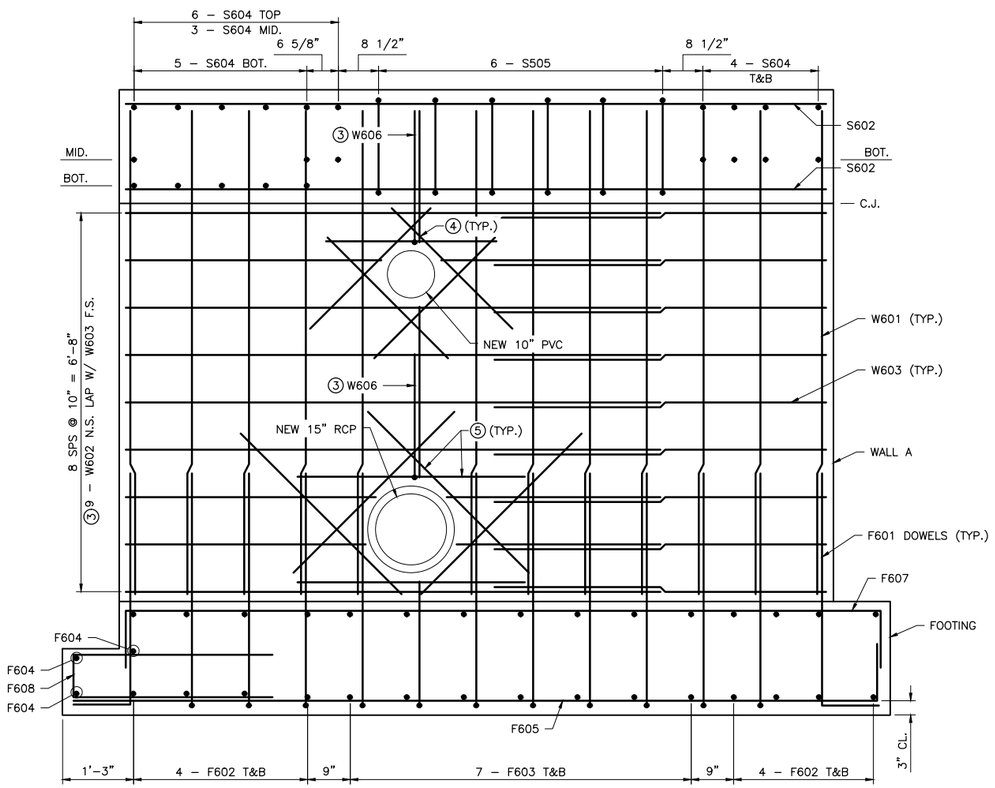

1 ELEVATION: WALL A REINFORCEMENT ①②
(OUTSIDE FACE SHOWN)

0 1 2 3
SCALE

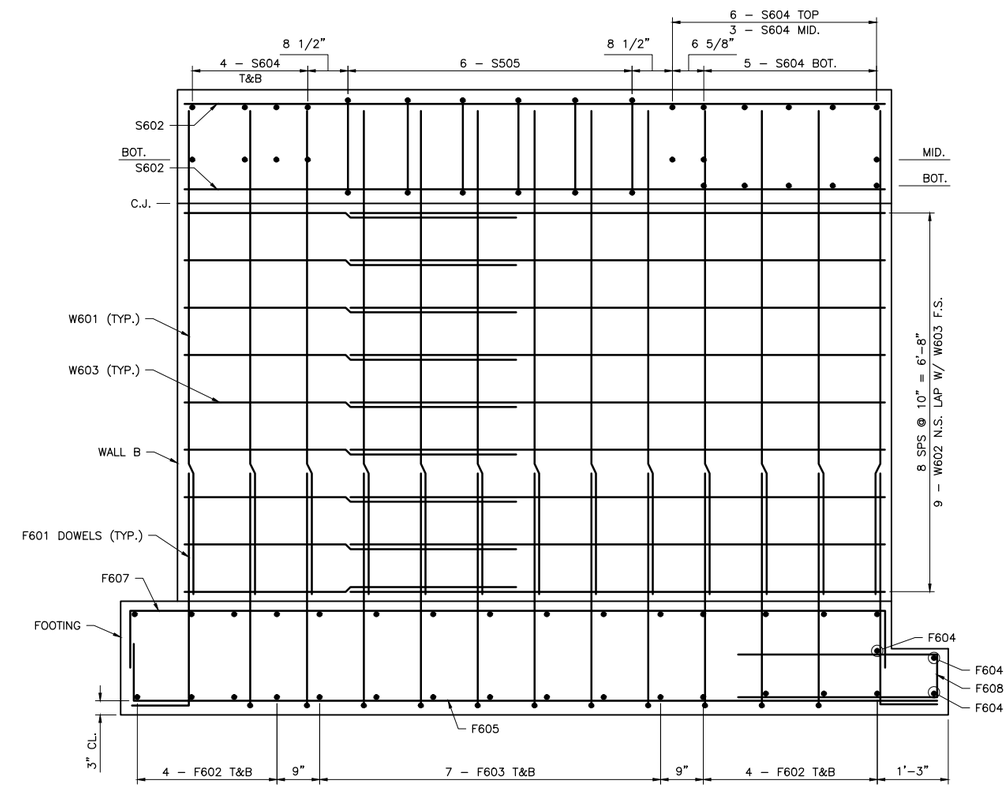

2 ELEVATION: WALL B REINFORCEMENT ①②
(OUTSIDE FACE SHOWN)

0 1 2 3
SCALE

NOTES:

① REMOVEABLE TOP SLAB & MH FRAME NOT SHOWN FOR CLARITY.

② MIN. LAP FOR #6 HORIZ. BARS: 2'–11"
MIN. LAP FOR #6 VERT. BARS: 2'–1"

③ SHIFT (6" MAX.) W601, W602 (O.F.) & W604 (I.F.) BAR SPACING NEAR OPGS. TO MINIMIZE FIELD CUTS. ADD W606 ABOVE 10" PVC & 15" RCP PIPE.

④ ADD'L W608 (x10) @ OPG., E.F.

⑤ ADD'L W607 (x12) @ OPG., E.F.

ISSUE FOR CONSTRUCTION

NO.	BY	CHK.	APP.	DATE	REVISION DESCRIPTION

I HEREBY CERTIFY THAT THIS PLAN, SPECIFICATION, OR REPORT WAS PREPARED BY ME OR UNDER MY DIRECT SUPERVISION AND THAT I AM A DULY LICENSED PROFESSIONAL ENGINEER UNDER THE LAWS OF THE STATE OF MINNESOTA.

SIGNATURE Paul K. Nielsen
PRINTED NAME Paul K. Nielsen
DATE 9/29/16 REG. NO. 19006

RELEASED TO/FOR	A	B	C	0	1	2	3
CLIENT							
BID							
CONSTRUCTION				9/29/16			
DATE RELEASED							

BARR
Corporate Headquarters: Minneapolis, Minnesota
Ph: 1–800–632–2277

Project Office:
BARR ENGINEERING CO.
4700 WEST 77TH STREET
MINNEAPOLIS, MN 55435
Ph: 1–800–632–2277
Fax: (952) 832–2601
www.barr.com

Scale	AS SHOWN
Date	7/18/2016
Drawn	MJJ
Checked	JPH
Designed	PKN
Approved	PKN

CITY OF MINNEAPOLIS
MINNEAPOLIS, MINNESOTA

COMO AVENUE SURGE CHAMBER
MINNEAPOLIS, MINNESOTA

C–I–P SHAFT REINFORCEMENT ELEVATIONS

BARR PROJECT No. 23/27–1478.00
CLIENT PROJECT No. CSW1411STCOMSCD
DWG. No. C10
REV. No. 0

CADD USER: Max J. Jouppe FILE: M:\DESIGN\23271478.00\23271478.00_C10.DWG PLOT SCALE: 1:2 PLOT DATE: 9/29/2016 2:13 PM

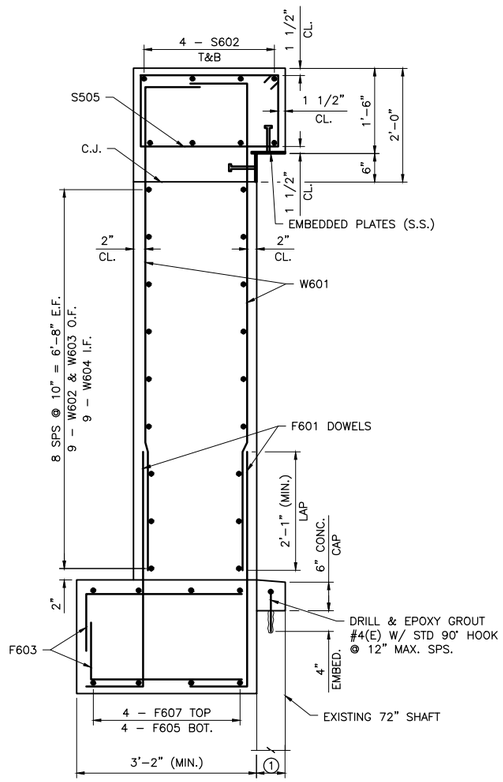

1 SECTION: WALL B REINFORCEMENT ③

0 1 2 3
SCALE

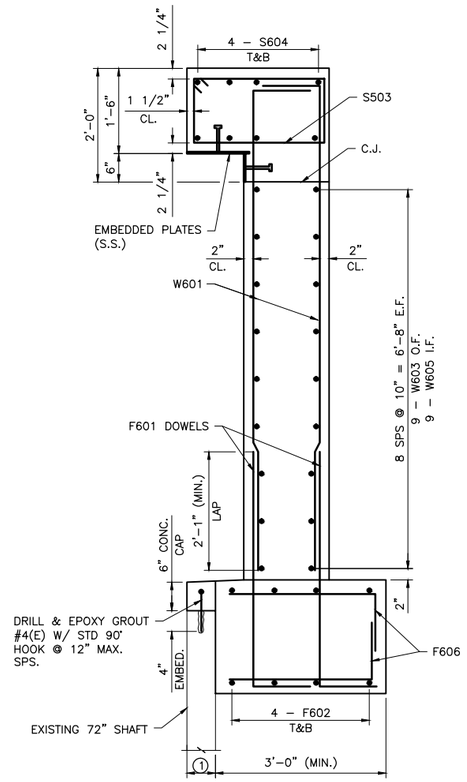

2 SECTION: WALL C REINFORCEMENT

0 1 2 3
SCALE

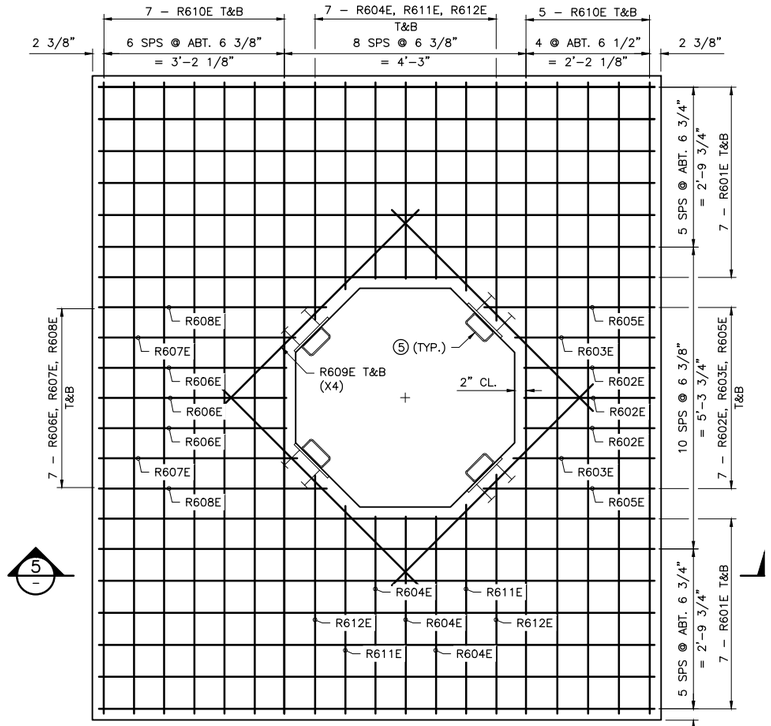

4 PLAN: REMOVEABLE SLAB REINFORCEMENT

0 1 2 3
SCALE

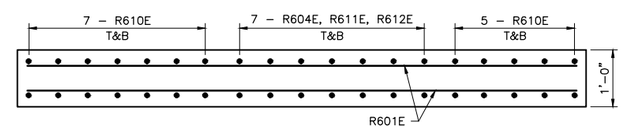

5 SECTION: REMOVEABLE SLAB

0 1 2 3
SCALE

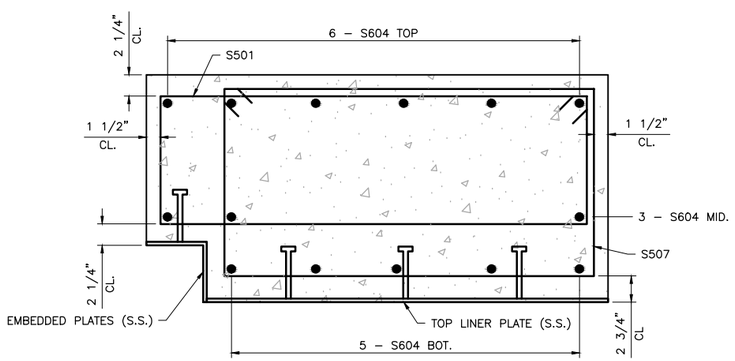

3 SECTION: TOP SLAB REINFORCEMENT
C9

0 3 6 9 1 2
SCALE

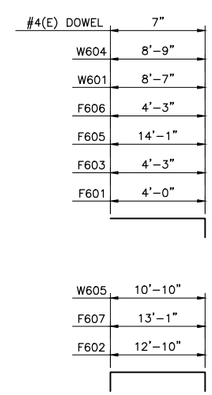

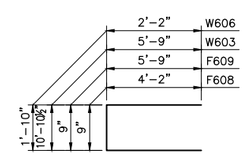

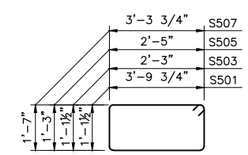

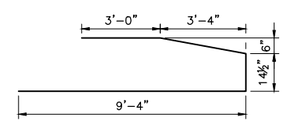

W602

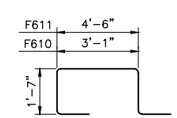

BILL OF REINFORCEMENT FOR C–I–P SHAFT

	BAR	NO.	LENGTH	LOCATION
	F601	74	5'–0"	FOOTING DOWEL
	F602	16	14'–10"	FOOTING TRANS. T&B
②	F603	28	5'–3"	FOOTING TRANS. T&B
	F604	3	12'–10"	FOOTING STEP
	F605	8	15'–1"	FOOTING LONG. BOT.
②	F606	14	5'–3"	FOOTING LONG. T&B
	F607	8	15'–1"	FOOTING LONG. TOP
④	F608	13	9'–1"	FOOTING STEP FACE BOT.
④	F609	2	12'–3"	FOOTING STEP FACE BOT.
	F610	5	8'–3"	FOOTING THRU CJ TOP
	F611	2	9'–8"	FOOTING THRU CJ TOP
	F612	8	5'–0"	FOOTING OPG. BARS E.F.
②	W601	74	9'–7"	WALL VERT.
	W602	18	16'–11"	WALL A&B HORIZ. O.F.
	W603	9	22'–2½"	WALL C HORIZ. O.F.
	W604	18	9'–9"	WALL A&B HORIZ. I.F.
	W605	9	12'–10"	WALL C HORIZ. I.F.
	W606	2	6'–2"	WALL A VERT. OPG.
	W607	12	4'–0"	WALL A OPG. BARS E.F.
	W608	10	3'–0"	WALL A OPG. BARS E.F.
	S501	7	10'–9 1/2"	TOP SLAB TIE OPG.
	S602	16	12'–2"	TOP SLAB LONG. T&B
	S503	6	7'–8"	TOP SLAB TIE OPG.
	S604	22	11'–0"	TOP SLAB TRANS. T&B
	S505	12	8'–3"	TOP SLAB TIE OPG.
	S406	16	3'–0"	CORNER BARS
	S507	7	10'–8 1/2"	TOP SLAB TIE OPG.
	R601E	28	9'–8"	REMOVEABLE SLAB TRANS T&B
	R602E	6	2'–3"	REMOVEABLE SLAB TRANS T&B
	R603E	4	2'–6"	REMOVEABLE SLAB TRANS T&B
	R604E	12	3'–5"	REMOVEABLE SLAB LONG T&B
	R605E	4	3'–0"	REMOVEABLE SLAB TRANS T&B
	R606E	6	3'–3"	REMOVEABLE SLAB TRANS T&B
	R607E	4	3'–6"	REMOVEABLE SLAB TRANS T&B
	R608E	4	4'–0"	REMOVEABLE SLAB TRANS T&B
	R609E	8	5'–0"	REMOVEABLE SLAB DIAG T&B
	R610E	24	11'–0"	REMOVEABLE SLAB LONG T&B
	R611E	8	3'–7"	REMOVEABLE SLAB LONG T&B
	R612E	8	4'–1"	REMOVEABLE SLAB LONG T&B
	#6 (E)	34	2'–0"	DOWEL, BOX CULVERT
	#4 (E)	21	1'–3"	DOWEL, 72" RCP SHAFT

NOTES:

① EXISTING 72" SHAFT WALL THICKNESS NOT KNOWN, ASSUMED 6", FIELD VERIFY

② BAR LENGTH VARIES, FIELD CUT AROUND SHAFT & PIPE LOCATIONS

③ WALL A REINF. SIMILAR

④ ADJUST BAR DIMENSIONS IF BOX CULVERT BOTTOM THICKNESS IS NOT 10".

⑤ LOCK SYSTEM TUBES, SEE DETAILS 7, 8 & 9 SEE DWG. NO. C13

ISSUE FOR CONSTRUCTION

NO.	BY	CHK.	APP.	DATE	REVISION DESCRIPTION

I HEREBY CERTIFY THAT THIS PLAN, SPECIFICATION, OR REPORT WAS PREPARED BY ME OR UNDER MY DIRECT SUPERVISION AND THAT I AM A DULY LICENSED PROFESSIONAL ENGINEER UNDER THE LAWS OF THE STATE OF MINNESOTA.

PRINTED NAME Paul K. Nielsen
SIGNATURE
DATE 9/29/16 LICENSE # 19006

RELEASED TO/FOR	A	B	C	0	1	2	3
CLIENT							
BID							
CONSTRUCTION				9/29/16			

DATE RELEASED

BARR
Corporate Headquarters: Minneapolis, Minnesota
Ph: 1–800–632–2277

Project Office:
BARR ENGINEERING CO.
4300 MARKETPOINTE DRIVE
Suite 200
MINNEAPOLIS, MN 55435
Ph: 1–800–632–2277
Fax: (952) 832–2601
www.barr.com

Scale	AS SHOWN
Date	7/18/2016
Drawn	MJJ
Checked	JPH
Designed	PKN
Approved	PKN

CITY OF MINNEAPOLIS
MINNEAPOLIS, MINNESOTA

COMO AVENUE SURGE CHAMBER
MINNEAPOLIS, MINNESOTA

C–I–P SHAFT REINFORCEMENT
PLAN & SECTIONS

BARR PROJECT No. 23/27–1478.00
CLIENT PROJECT No. CSW1411STCOMSCD
DWG. No. C11
REV. No. 0

CADD USER: Max J. Jouppe FILE: M:\DESIGN\23271478.00\23271478.00_C11.DWG PLOT SCALE: 1:2 PLOT DATE: 9/29/2016 2:16 PM

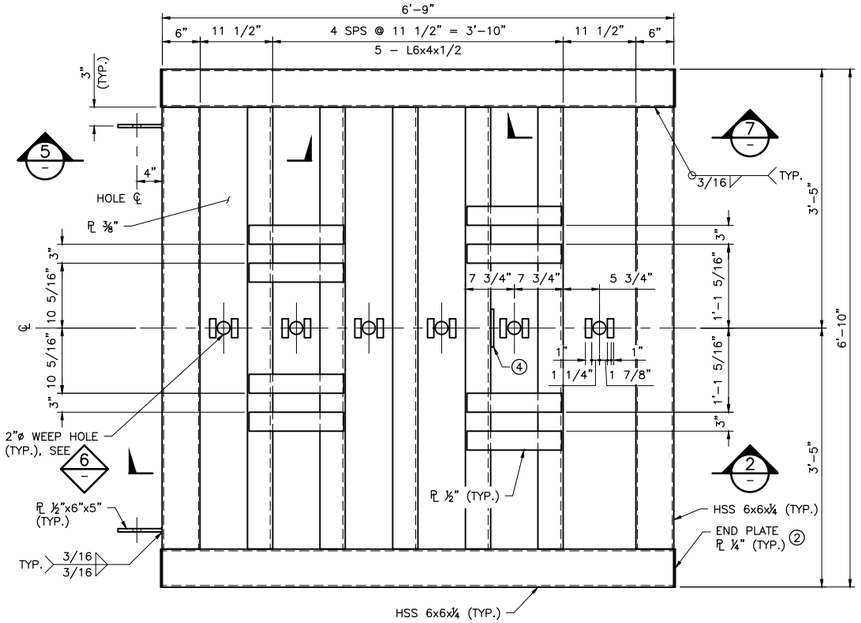

1 PLAN: DEFLECTOR PLATE ①③⑥

0 3 6 9 1 2
SCALE

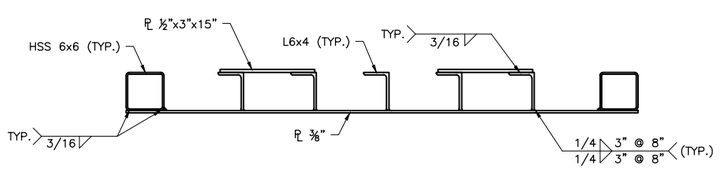

2 SECTION: DEFLECTOR PLATE

0 3 6 9 1 2
SCALE

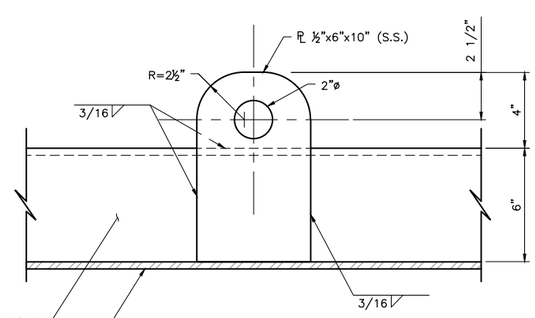

3 DETAIL: PICKING EYE

0 3 6 9 1
SCALE

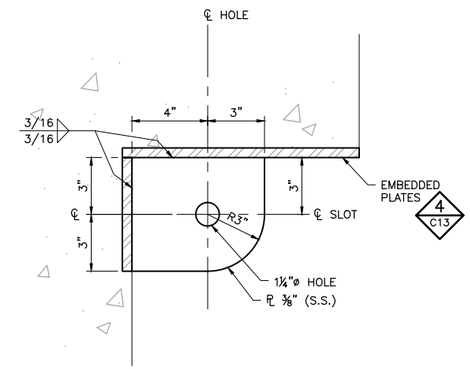

4 DETAIL: HINGE PLATE

0 3 6 9 1
SCALE

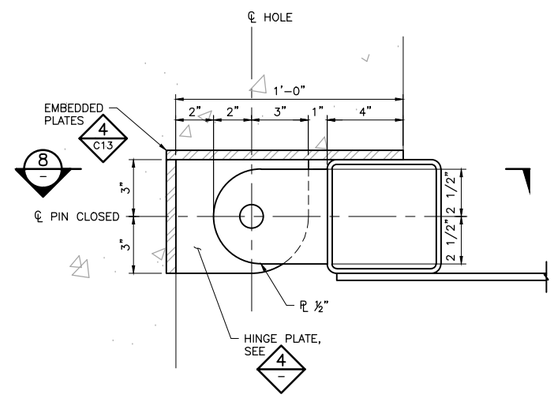

5 SECTION: DEFLECTOR HINGE (CLOSED)

0 3 6 9 1
SCALE

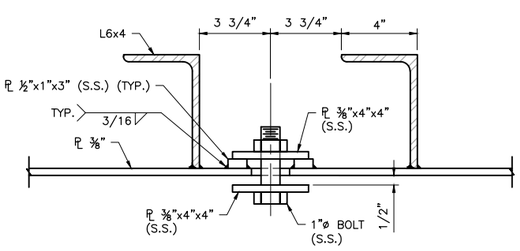

6 DETAIL: WEEP HOLE

0 3 6 9 1
SCALE

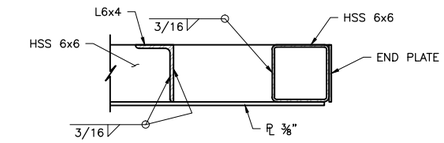

7 SECTION: DEFLECTOR PLATE

0 3 6 9 1 2
SCALE

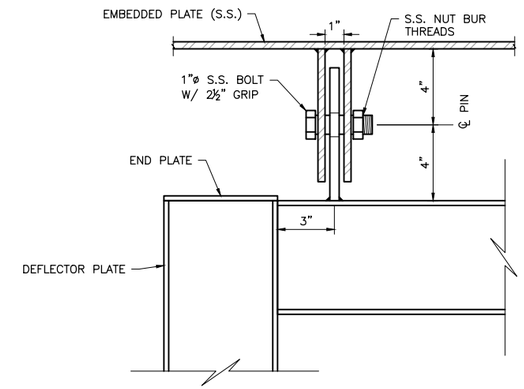

8 SECTION: HINGE PLATE & PIN

0 3 6 9 1
SCALE

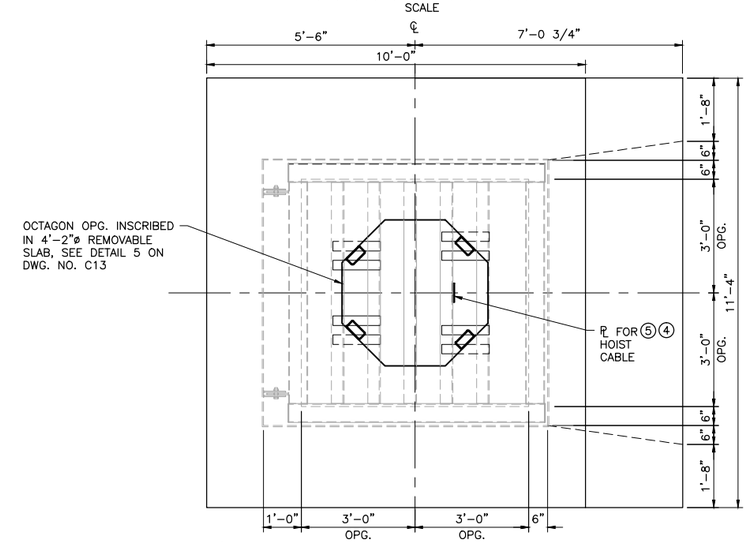

9 DETAIL: DEFLECTOR PLATE LOCK SYSTEM

0 1 2 3 4 5
SCALE

NOTES:

1. APPROX. WT. = 1750 LBS, ALL MATERIAL STAINLESS STEEL TYPE 316L.
2. MAKE WATER TIGHT ENDS W/ END PLATE AND CONTINUOUS WELD.
3. BOLT AND PLATE WASHER ASSEMBLY FOR WEEP HOLES, & EMBEDDED PLATES INCLUDING HINGE PLATE NOT SHOWN FOR CLARITY.
4. PICKING EYE, SEE DETAIL 3
5. PROVIDE 20' LONG ⅜"ø, 7x19, STAINLESS STEEL (530400), AIRCRAFT CABLE W/ CROSBY SHACKLES CONNECTED EACH END. MINIMUM WORKING LOAD = 2,000 POUNDS
6. FOR AERIAL VIEW OF DEFLECTOR PLATE LOCKING SYSTEM LOOKING DOWN, SEE DETAIL 9.

ISSUE FOR CONSTRUCTION

NO.	BY	CHK.	APP.	DATE	REVISION DESCRIPTION

I HEREBY CERTIFY THAT THIS PLAN, SPECIFICATION, OR REPORT WAS PREPARED BY ME OR UNDER MY DIRECT SUPERVISION AND THAT I AM A DULY LICENSED PROFESSIONAL ENGINEER UNDER THE LAWS OF THE STATE OF MINNESOTA.

PRINTED NAME Paul K. Nielsen
SIGNATURE
DATE 9/29/16 LICENSE # 19006

RELEASED TO/FOR	A	B	C	0	1	2	3
CLIENT							
BID							
CONSTRUCTION				9/29/16			
DATE RELEASED							

BARR
Corporate Headquarters: Minneapolis, Minnesota Ph: 1-800-632-2277

Project Office:
BARR ENGINEERING CO.
4300 MARKETPOINTE DRIVE
Suite 200
MINNEAPOLIS, MN 55435
Ph: 1-800-632-2277
Fax: (952) 832-2601
www.barr.com

Scale	AS SHOWN
Date	7/18/2016
Drawn	MJJ
Checked	JPH
Designed	PKN
Approved	PKN

CITY OF MINNEAPOLIS
MINNEAPOLIS, MINNESOTA

COMO AVENUE SURGE CHAMBER
MINNEAPOLIS, MINNESOTA

DEFLECTOR PLATE
PLANS, SECTIONS & DETAILS

BARR PROJECT No. 23/27-1478.00
CLIENT PROJECT No. CSW1411STCOMSCD
DWG. No. C12
REV. No. 0

CADD USER: Max J. Jouppe FILE: M:\DESIGN\23271478.00\23271478.00_C12.DWG PLOT SCALE: 1:2 PLOT DATE: 9/29/2016 11:31 AM

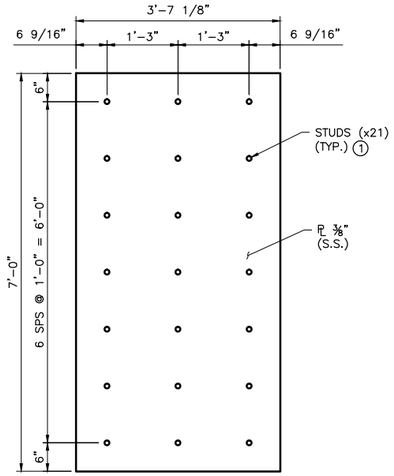

1 DETAIL: SIDE LINER PLATE

0 1 2 3
SCALE

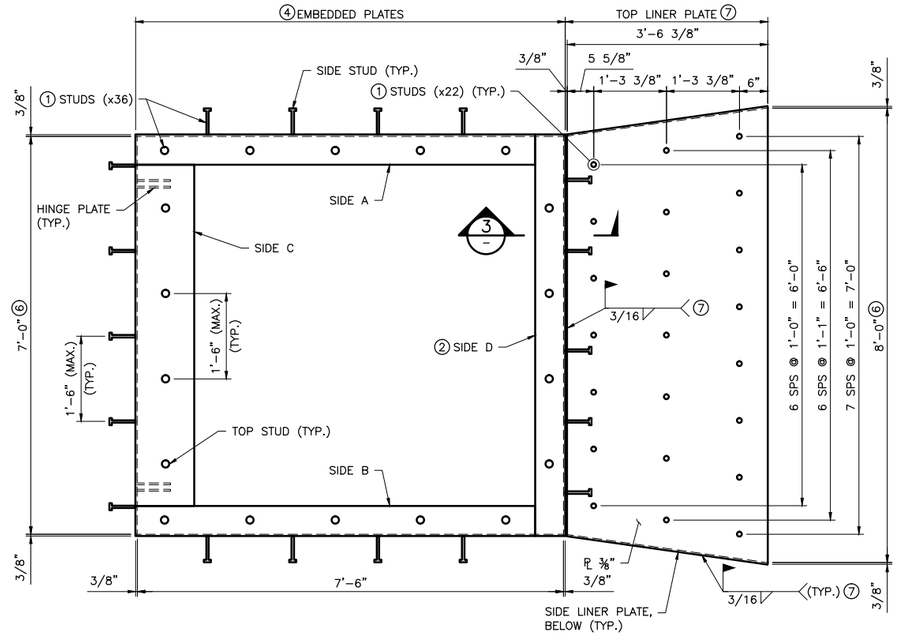

2 DETAIL: TOP LINER PLATE & EMBEDDED PLATE

0 1 2 3
SCALE

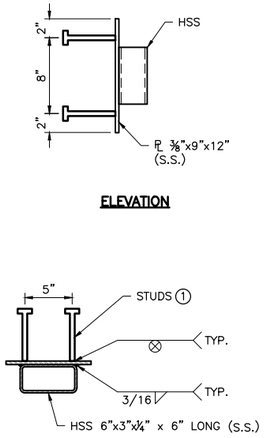

6 DETAIL: LOCK SYSTEM TUBES ③

0 3 6 9 1 2
SCALE

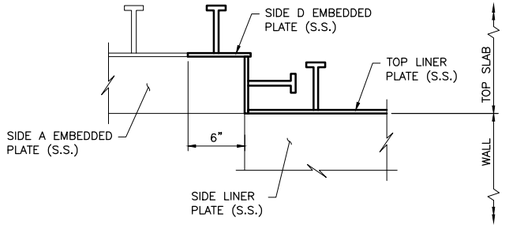

3 SECTION: LINER & EMBEDDED PLATES

0 3 6 9 1 2
SCALE

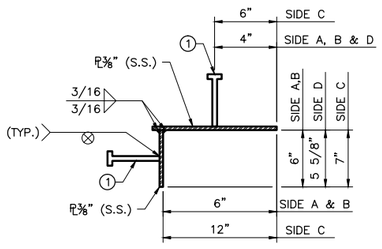

4 DETAIL: EMBEDDED PLATE
N.T.S.

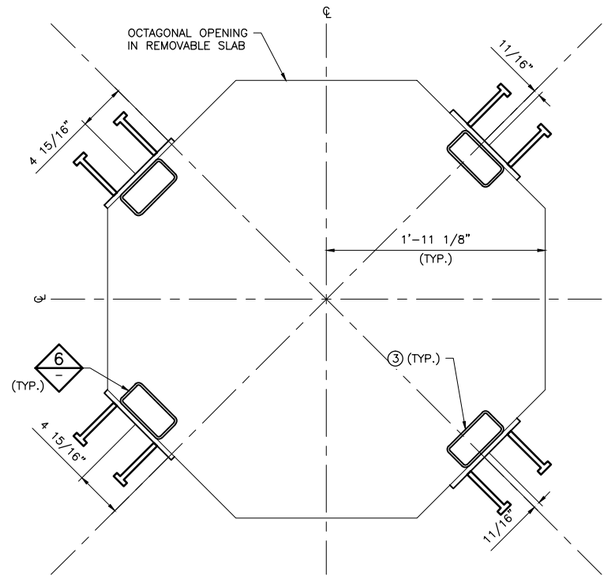

5 DETAIL: LOCK SYSTEM TUBES ⑤

0 3 6 9 1 2
SCALE

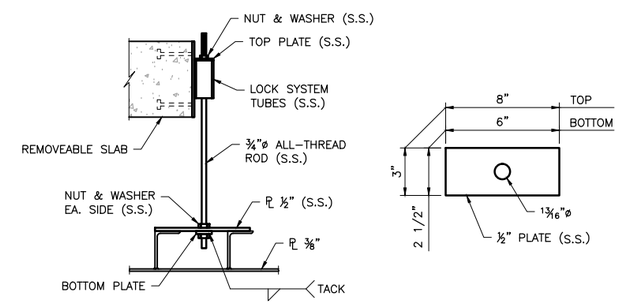

7 DETAIL: DEFLECTOR PLATE LOCK SYSTEM
N.T.S.

NOTES:

1. ½"x5" S.S. 316L STUD AWS D1.6 @ 18" (MAX.) STAGGER SIDE STUDS W/ TOP STUDS, MAX. STUD SPACING FROM PLATE EDGE = 9"
2. ADJUST STUD SPACING ON SIDE D TO MISS TOP LINER PLATE STUDS
3. 4 LOCK SYSTEM DEVICES REQUIRED.
4. WELD ALL EMBEDDED PLATES TOGETHER & INSTALL AS 1 UNIT.
5. FOR OVERALL AERIAL VIEW OF DEFLECTOR PLATE LOCKING SYSTEM, SEE DETAIL 9 ON DWG. NO. C12.
6. INSIDE FACE OF PLATE TO MATCH CONCRETE OPENINGS.
7. TOP LINER PLATE TO SIT ON SIDE LINER PLATES. FIELD WELD (STITCH) TOP LINER PLATE TO SIDE LINER & EMBEDDED PLATES AS NECESSARY TO HOLD IN PLACE PRIOR TO TOP SLAB POUR.

ISSUE FOR CONSTRUCTION

NO.	BY	CHK.	APP.	DATE	REVISION DESCRIPTION

I HEREBY CERTIFY THAT THIS PLAN, SPECIFICATION, OR REPORT WAS PREPARED BY ME OR UNDER MY DIRECT SUPERVISION AND THAT I AM A DULY LICENSED PROFESSIONAL ENGINEER UNDER THE LAWS OF THE STATE OF MINNESOTA.

PRINTED NAME Paul K. Nielsen
SIGNATURE
DATE 9/29/16 LICENSE # 19006

CLIENT							
BID							
CONSTRUCTION				9/29/16			
RELEASED TO/FOR	A	B	C	0	1	2	3
	DATE RELEASED						

BARR
Corporate Headquarters: Minneapolis, Minnesota Ph: 1-800-632-2277

Project Office:
BARR ENGINEERING CO.
4300 MARKETPOINTE DRIVE
Suite 200
MINNEAPOLIS, MN 55435
Ph: 1-800-632-2277
Fax: (952) 832-2601
www.barr.com

Scale	AS SHOWN
Date	7/18/2016
Drawn	MJJ
Checked	JPH
Designed	PKN
Approved	PKN

CITY OF MINNEAPOLIS
MINNEAPOLIS, MINNESOTA

COMO AVENUE SURGE CHAMBER
MINNEAPOLIS, MINNESOTA

MISCELLANEOUS STEEL
SECTION & DETAILS

BARR PROJECT No. 23/27-1478.00
CLIENT PROJECT No. CSW1411STCOMSCD
DWG. No. C13
REV. No. 0

CADD USER: Max J. Jouppe FILE: M:\DESIGN\23271478.00\23271478.00_C13.DWG PLOT SCALE: 1:2 PLOT DATE: 9/29/2016 11:32 AM

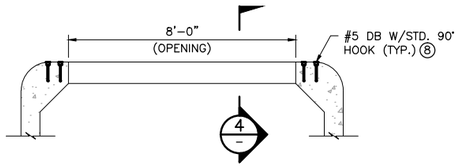

1 SECTION: TRANSVERSE OPENING 1
N.T.S.

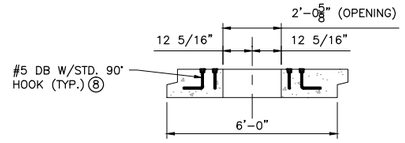

4 SECTION: LONGITUDINAL OPENING
N.T.S.

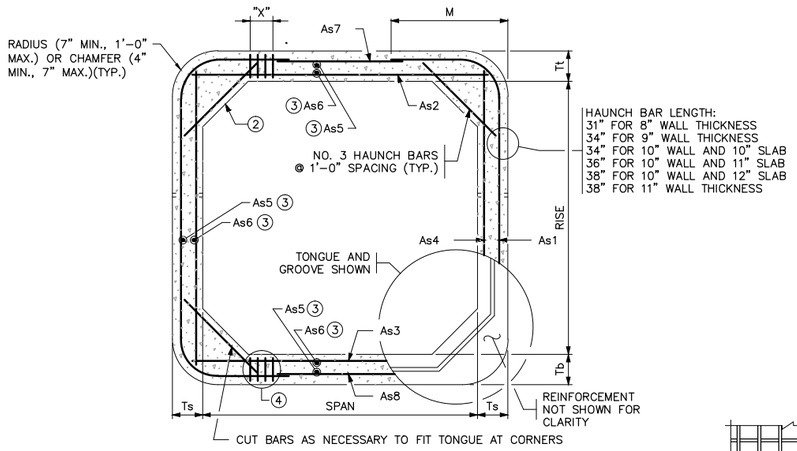

2 SECTION: TRANSVERSE BARREL
N.T.S.
BAR REINFORCEMENT OPTION SHOWN

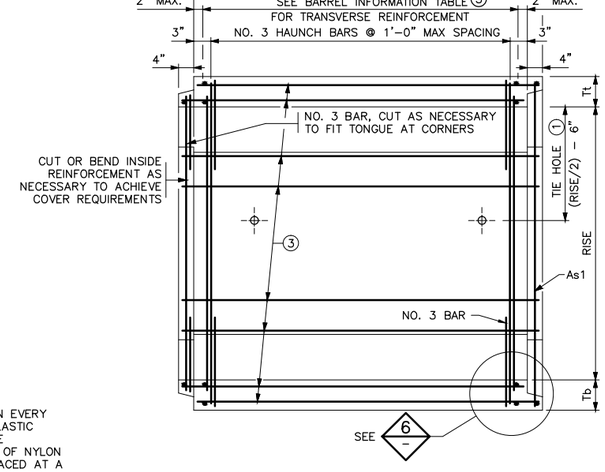

5 SECTION: LONGITUDINAL BARREL
N.T.S.
BAR REINFORCEMENT OPTION SHOWN

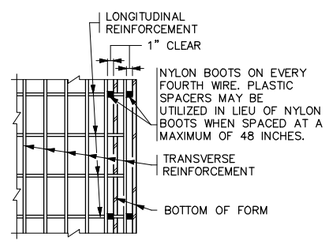

PLAN

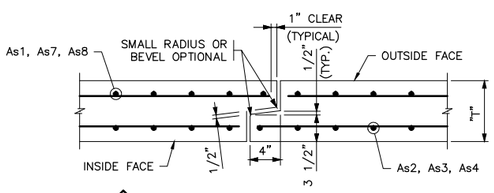

3 DETAIL: TONGUE AND GROOVE JOINT
N.T.S.

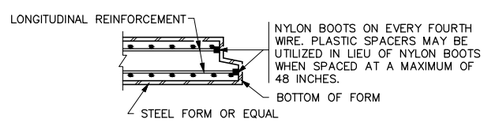

SECTION

6 DETAIL: FORMING 6
N.T.S.

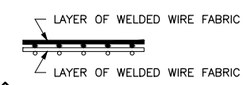

7 DETAIL: FABRIC LAYER
N.T.S.

WHEN MORE THAN ONE LAYER OF WELDED WIRE FABRIC IS USED TO OBTAIN THE REQUIRED REINFORCEMENT AREAS, PLACE THE WIRES OF THE WELDED WIRE REINFORCEMENT AS SHOWN

NOTES:

1. USE 1" DIAMETER CULVERT TIES. SEE STANDARD PLATE NO. 3145 FOR CONNECTION DETAILS.
2. USE 12" VERTICAL & 12" HORIZONTAL HAUNCHES ON ALL BOX SIZES.
3. PLACE LONGITUDINAL REINFORCEMENT DENOTED AS As5 AND As6 IN ALL SLABS AND WALLS WITH A MINIMUM OF 0.06 SQ IN/FT. MIN.
4. SEE STANDARD Mn/DOT PLATE NO. 3007 FOR SHEAR REINFORCEMENT OPTIONS. THE MAXIMUM SHEAR REINFORCEMENT SPACING IN THE LONGITUDINAL DIRECTION IS 6".
5. BOX CULVERT DATA NOT SHOWN IN TABLE 1 TO BE DESIGNED BY BOX CULVERT MANUFACTURER'S ENGINEER REGISTERED IN STATE OF MINNESOTA. THE ENGINEER SHOULD FOLLOW THE SPECIAL REQUIREMENTS SHOWIN IN THE "BASIS OF DESIGN". SUBMIT A CERTIFIED COPY OF THE DESIGN COMPUTATIONS FOR PROJECT RECORDS. COMPUTATIONS SHOULD INCLUDE A TABLE SIMILAR TO TABLE 1 WITH THE REQUIRED DESIGN VALUES FOR WALL THICKNESS AND REINFORCEMENT REQUIREMENTS.
6. ELIMINATE MALE OR FEMALE TONGUE END JOINT AT CONNECTION TO C-I-P SHAFT, SEE DWG. NO. C5.
7. SEE BASIS OF DESIGN FOR MINIMUM BOX CULVERT LENGTH.
8. FOR DB DOWELS & DI LOCATION & QUANTITY, SEE DWG. NO. C16 & C17.

1. CONSTRUCT CULVERTS PER Mn/DOT SPEC. 2412 EXCEPT AS NOTED.
2. PROVIDE THE WELDED WIRE REINFORCEMENT, SHEAR REINFORCEMENT AND REINFORCEMENT BARS PER THE APPLICABLE REQUIREMENTS OF AASHTO M259.
3. 1 1/2" MIN. AND 2" MAX. CONCRETE COVER ON ALL REINFORCEMENT, INCLUDING SHEAR REINFORCEMENT, EXCEPT FOR TONGUE AND GROOVE DETAIL.
4. ANY OF THE FOLLOWING COMBINATIONS OF STEEL REINFORCEMENT MAY BE USED:
   (a) 1 OR 2 LAYERS OF WELDED WIRE REINFORCEMENT OR
   (b) 1 LAYER OF WELDED WIRE REINFORCEMENT AND 1 LAYER OF REINFORCEMENT BARS OR
   (c) 1 LAYER OF REINFORCEMENT BARS.
5. DEVELOP REINFORCEMENT IN ACCORDANCE WITH AASHTO "LRFD BRIDGE DESIGN SPECIFICATIONS". IF BAR REINFORCEMENT IS SUBSTITUTED FOR WELDED WIRE REINFORCEMENT, INCREASE THE AREA OF REINFORCEMENT BY 8%, AND SUBMIT DESIGN CALCULATIONS VERIFYING COMPLIANCE WITH AASHTO 5.7.3.4. "CONTROL OF CRACKING BY DISTRIBUTION OF REINFORCEMENT.
6. MAXIMUM SIZE OF REINFORCEMENT BARS IS NO. 6. THE MAXIMUM WELDED WIRE REINFORCEMENT SIZE IS W23 PER LAYER (MAXIMUM OF 2 LAYERS).
7. SPACE CENTER TO CENTER OF THE TRANSVERSE WIRES NOT LESS THAN 2" NOR MORE THAN 4". SPACE CENTER TO CENTER OF THE LONGITUDINAL WIRES NOT MORE THAN 8".
8. WELDING IS NOT PERMITTED ON REINFORCEMENT BARS OR WELDED WIRE REINFORCEMENT, EXCEPT THAT THE ORIGINAL WELDING REQUIRED TO MANUFACTURE WIRE REINFORCING IS ACCEPTABLE.
9. WHEN REINFORCEMENT IS CUT, PLACE ADDITIONAL REINFORCEMENT ON BOTH SIDES OF THE CUT MEMBER TO REPLACE OR EXCEED THE CUT STEEL.
10. USE CONCRETE MIX NO. 3W82 WITH NO CALCIUM CHLORIDE ALLOWED.
11. PROVIDE SHOP DRAWING APPROVAL PER Mn/DOT SPEC. 3238.2.A.
12. COMPACT THE FIRST 1.5' (LOOSE) OF FILL ABOVE THE BOX WITH LIGHT COMPACTION EQUIPMENT SUCH AS PLATE COMPACTORS OR WALK BEHIND ROLLERS.
13. TRANSVERSE REINFORCEMENT IS PARALLEL TO THE CULVERT SPAN. LONGITUDINAL REINFORCEMENT IS PERPENDICULAR TO THE CULVERT SPAN.
14. PLACE EXTERNAL JOINT WRAP AT TOP AND EACH SIDE OF EACH JOINT.
15. PROVIDE GASKETS FOR EACH JOINT OF EACH SECTION. GASKETS TO BE RAM NECK, RUBBER NECK OR EQUAL.

BASIS OF DESIGN

BOX CULVERT DESIGN PER MNDOT STANDARD FIG. 5-395.100(A), APPROVED: MARCH 24, 2011 WITH OCTOBER 9, 2015 REVISIONS, EXCEPT AS MODIFIED BELOW:

1. LIVE LOAD FOR TOP SLAB TO INCLUDE VEHICLE PERPENDICULAR AND PARALLEL TO SPAN.
2. GRATES AT ROADWAY ELEVATION, SIMPLY SUPPORTED IN DIRECTION OF TRAFFIC.
3. EACH BOX SECTION WITH OPENING TO BE 6'-0" LONG.
4. MINIMUM TOP SLAB THICKNESS (T_t) FOR BOXES W/ OPENING = 12"
5. LEAN MIX CONCRETE BACKFILL TO BE PLACED BETWEEN C-I-P RISERS.
6. TIE ALL PRE-CAST BOX CULVERT JOINTS.

TABLE 1 – BARREL INFORMATION 5

TOP SLAB OPENING	SIZE	CLASS	f'c (P.S.I.)	FILL HEIGHT RANGE (FT.)	DIMENSIONS					WEIGHT (LBS./FT.)	WELDED WIRE FABRIC REINFORCEMENT													4 SHEAR REINFORCEMENT TOP AND BOTTOM OF BARREL		
											As1			As2		As3		As4		As7		As8				
					SPAN (FT.)	RISE (FT.)	Tt (IN.)	Tb (IN.)	Ts (IN.)		AREA (IN^2/FT.)	LENGTH (FT.)	M (FT.)	AREA (IN^2/FT.)	LENGTH (FT.)	AREA (IN^2/FT.)	LENGTH (FT.)	AREA (IN^2/FT.)	LENGTH (FT.)	AREA (IN^2/FT.)	LENGTH (FT.)	AREA (IN^2/FT.)	LENGTH (FT.)	AREA (IN^2/FT.)	MAX. SPG. (IN.)	X (IN.)
NO	10x7	2	5,000	–	10	7	–	–	–	–	–	–	–	–	–	–	–	–	–	–	–	–	–	–	–	–
YES	10x7	2	5,000	–	10	7	–	–	–	–	–	–	–	–	–	–	–	–	–	–	–	–	–	–	–	–
YES	10x10	2	5,000	–	10	10	–	–	–	–	–	–	–	–	–	–	–	–	–	–	–	–	–	–	–	–

ISSUE FOR CONSTRUCTION

NO.	BY	CHK.	APP.	DATE	REVISION DESCRIPTION

I HEREBY CERTIFY THAT THIS PLAN, SPECIFICATION, OR REPORT WAS PREPARED BY ME OR UNDER MY DIRECT SUPERVISION AND THAT I AM A DULY LICENSED PROFESSIONAL ENGINEER UNDER THE LAWS OF THE STATE OF MINNESOTA.

PRINTED NAME Paul K. Nielsen
SIGNATURE
DATE 9/29/16 LICENSE # 19006

RELEASED TO/FOR	A	B	C	0	1	2	3
CLIENT							
BID							
CONSTRUCTION				9/29/16			

DATE RELEASED

BARR
Corporate Headquarters: Minneapolis, Minnesota Ph: 1-800-632-2277
Project Office:
BARR ENGINEERING CO.
4300 MARKETPOINTE DRIVE
Suite 200
MINNEAPOLIS, MN 55435
Ph: 1-800-632-2277
Fax: (952) 832-2601
www.barr.com

Scale	AS SHOWN
Date	7/18/2016
Drawn	MJJ
Checked	JPH
Designed	PKN
Approved	PKN

CITY OF MINNEAPOLIS
MINNEAPOLIS, MINNESOTA

COMO AVENUE SURGE CHAMBER
MINNEAPOLIS, MINNESOTA

PRECAST CONCRETE BOX CULVERT
BARREL DETAILS (SPECIAL DESIGN)

BARR PROJECT No. 23/27-1478.00
CLIENT PROJECT No. CSW1411STCOMSCD
DWG. No. C14
REV. No. 0

CADD USER: Max J. Jouppe FILE: M:\DESIGN\23271478.00\23271478.00_C14.DWG PLOT SCALE: 1:2 PLOT DATE: 9/29/2016 11:35 AM

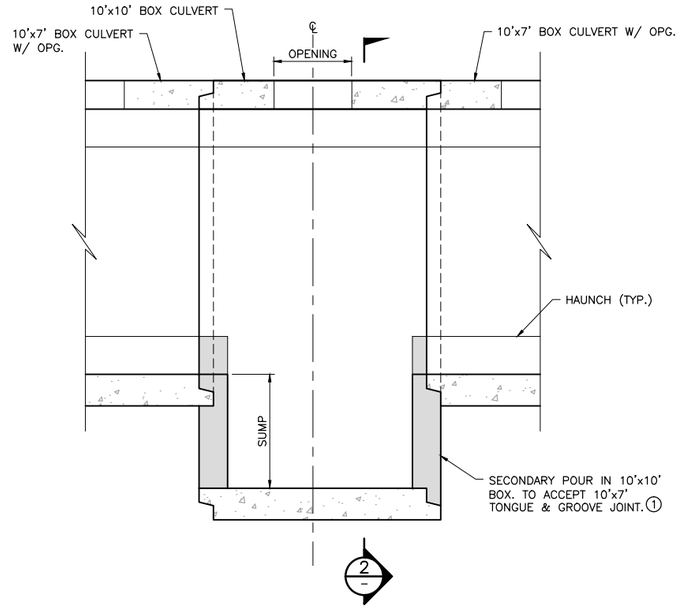

1 C3 DETAIL: 10'x10' BOX CULVERT W/ SUMP

0 1 2 3 4 5
SCALE IN FEET

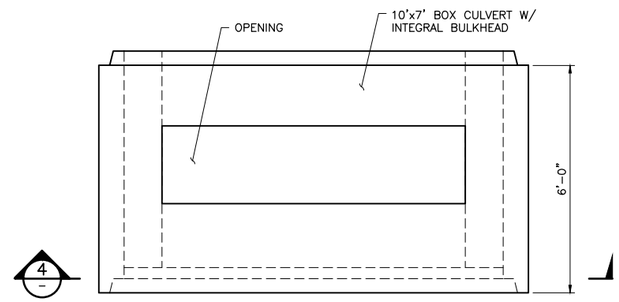

3 - PLAN: 10'x7' BOX CULVERT W/ BULKHEAD

0 1 2 3 4 5
SCALE IN FEET

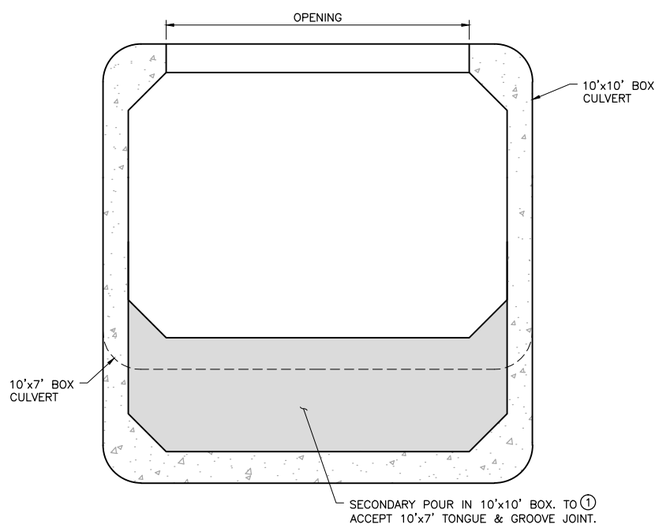

2 - SECTION: 10'x10' BOX CULVERT W/ SUMP

0 1 2 3 4 5
SCALE IN FEET

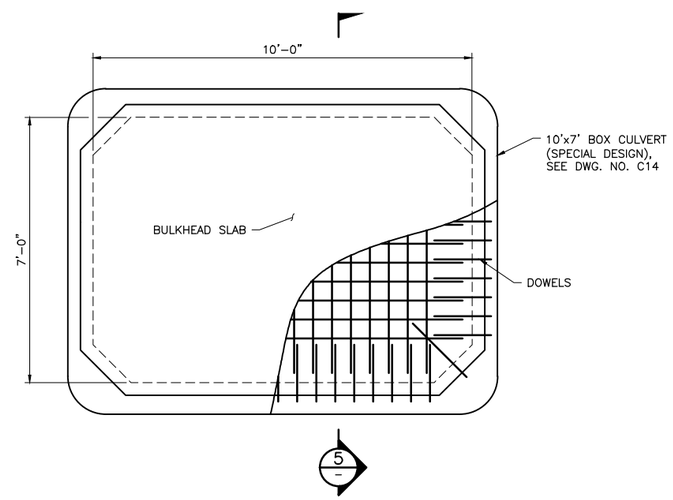

4 - SECTION: 10'x7' BOX CULVERT W/ BULKHEAD 1

0 1 2 3 4 5
SCALE IN FEET

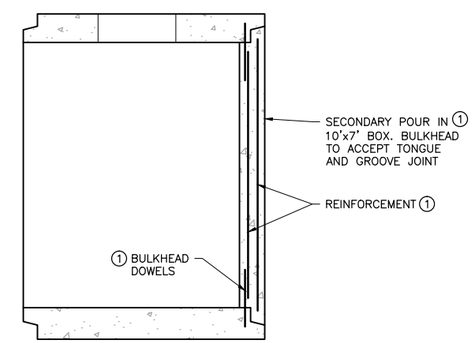

5 - SECTION: 10'x7' BOX CULVERT W/ BULKHEAD

0 1 2 3 4 5
SCALE IN FEET

NOTES:

1. BOX CULVERT SECTIONS, SUMP WALLS & END BULKHEAD TO BE DESIGNED BY MANUFACTURER. SEE DESIGN REQUIREMENTS AND BASIS OF DESIGN ON DWG. NO. C14.

ISSUE FOR CONSTRUCTION

NO.	BY	CHK.	APP.	DATE	REVISION DESCRIPTION

I HEREBY CERTIFY THAT THIS PLAN, SPECIFICATION, OR REPORT WAS PREPARED BY ME OR UNDER MY DIRECT SUPERVISION AND THAT I AM A DULY LICENSED PROFESSIONAL ENGINEER UNDER THE LAWS OF THE STATE OF MINNESOTA.

PRINTED NAME Paul K. Nielsen
SIGNATURE
DATE 9/29/16 LICENSE # 19006

RELEASED TO/FOR	A	B	C	0	1	2	3
CLIENT							
BID							
CONSTRUCTION				9/29/16			

DATE RELEASED

BARR
Corporate Headquarters: Minneapolis, Minnesota Ph: 1-800-632-2277
Project Office:
BARR ENGINEERING CO.
4300 MARKETPOINTE DRIVE
Suite 200
MINNEAPOLIS, MN 55435
Ph: 1-800-632-2277
Fax: (952) 832-2601
www.barr.com

Scale	AS SHOWN
Date	7/18/2016
Drawn	MJJ
Checked	JPH
Designed	PKN
Approved	PKN

CITY OF MINNEAPOLIS
MINNEAPOLIS, MINNESOTA

COMO AVENUE SURGE CHAMBER
MINNEAPOLIS, MINNESOTA

PRECAST CONCRETE BOX CULVERT
SUMP & END BULKHEAD DETAILS

BARR PROJECT No. 23/27-1478.00
CLIENT PROJECT No. CSW1411STCOMSCD
DWG. No. C15
REV. No. 0

CADD USER: Max J. Jouppe FILE: M:\DESIGN\23271478.00\23271478.00_C15.DWG PLOT SCALE: 1:2 PLOT DATE: 9/29/2016 11:37 AM

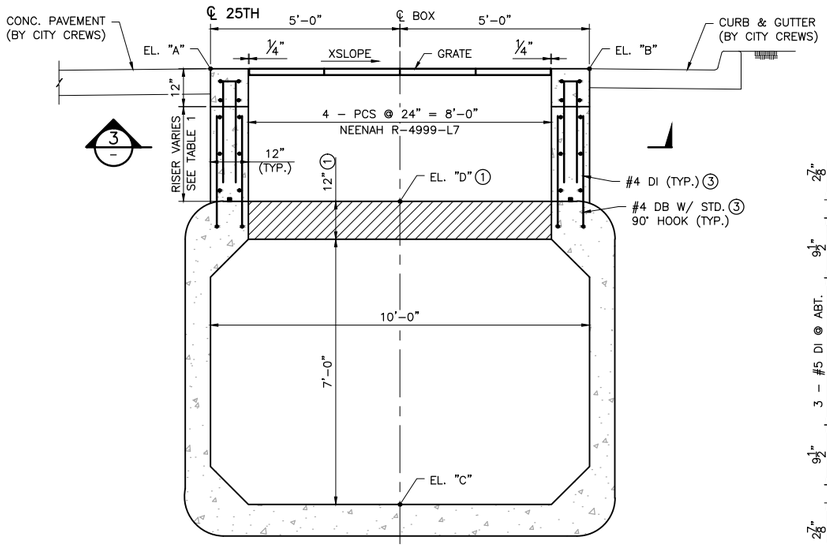

1 / C4 SECTION: C–I–P RISER & PAVEMENT GEOMETRY ④

0 1 2 3 4 5
SCALE IN FEET

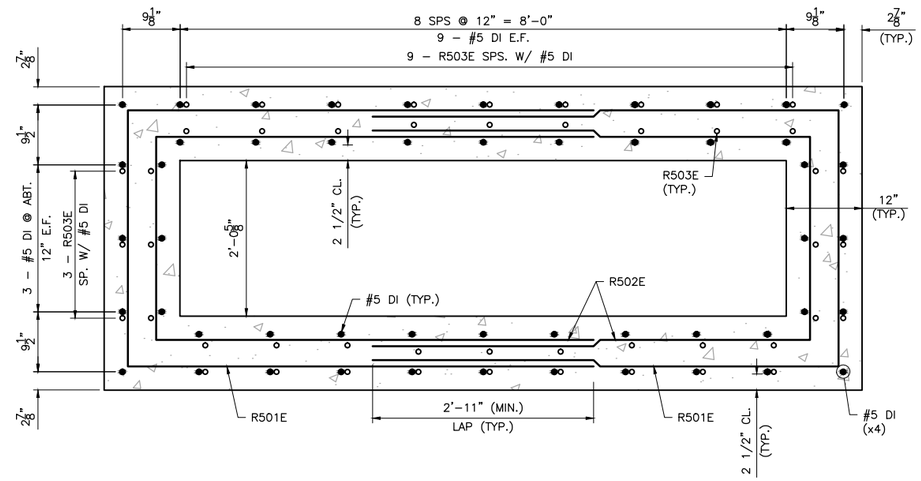

3 / – SECTION: RISER REINFORCEMENT ②⑤

0 3" 6" 9" 1' 2' 3'
SCALE

TABLE 1

RISER NO.	STATION	CONC. PAVEMENT		BOX CULVERT		DIST AD FT	DIST BD FT	RDWY XSLOPE FT/FT
		CENTERLINE EL. "A"	10' RT EL. "B"	INVERT EL. "C"	TOP BOX EL. "D" ①			
1	0+37.5	860.62	860.41	848.87	856.87	3.75	3.54	0.021
2	0+43.5	860.65	860.45	848.90	856.90	3.75	3.55	0.020
3	0+49.5	860.68	860.48	848.93	856.93	3.75	3.55	0.020
4	0+55.5	860.71	860.52	848.96	856.96	3.75	3.56	0.019
5	0+61.5	860.74	860.56	848.99	856.99	3.75	3.57	0.018
6	0+67.5	860.77	860.60	849.02	857.02	3.75	3.58	0.017
7	0+73.5	860.80	860.64	849.05	857.05	3.75	3.59	0.016
8	0+79.5	860.82	860.67	849.08	857.08	3.74	3.59	0.015
9	0+85.5	860.85	860.71	849.11	857.11	3.74	3.60	0.014
10	0+91.5	860.88	860.75	849.14	857.14	3.74	3.61	0.013
11	0+97.5	860.91	860.79	849.17	857.17	3.74	3.62	0.012
12	1+03.5	860.94	860.83	849.20	857.20	3.74	3.63	0.011
13	1+09.5	860.97	860.87	849.23	857.23	3.74	3.64	0.010
14	1+15.5	861.00	860.90	849.26	857.26	3.74	3.64	0.010
15	1+21.5	861.03	860.94	849.29	857.29	3.74	3.65	0.009
16	1+27.5	861.06	860.98	849.32	857.32	3.74	3.66	0.008
17	1+33.5	861.09	861.02	849.35	857.35	3.74	3.67	0.007

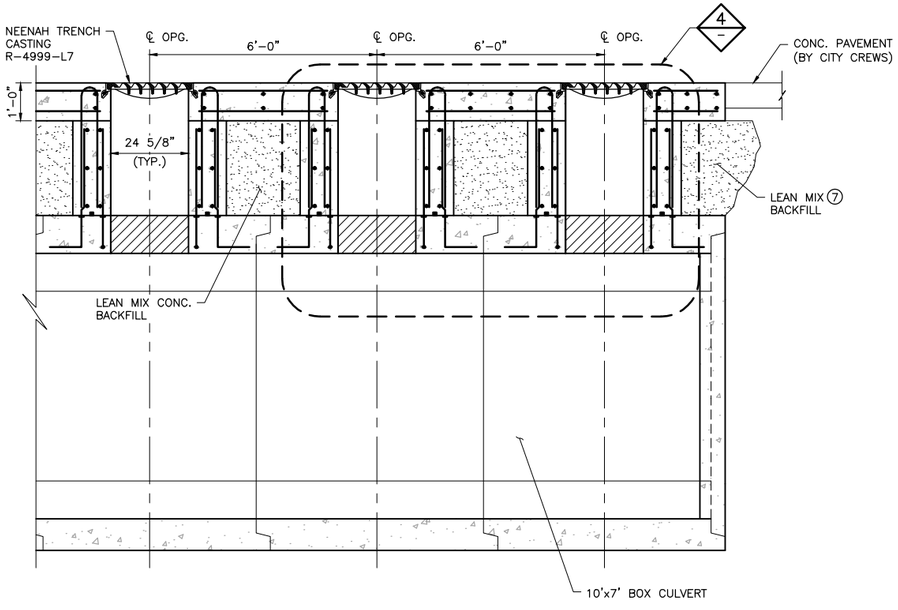

2 / C4 SECTION: RISER REINFORCEMENT

0 1 2 3 4 5
SCALE IN FEET

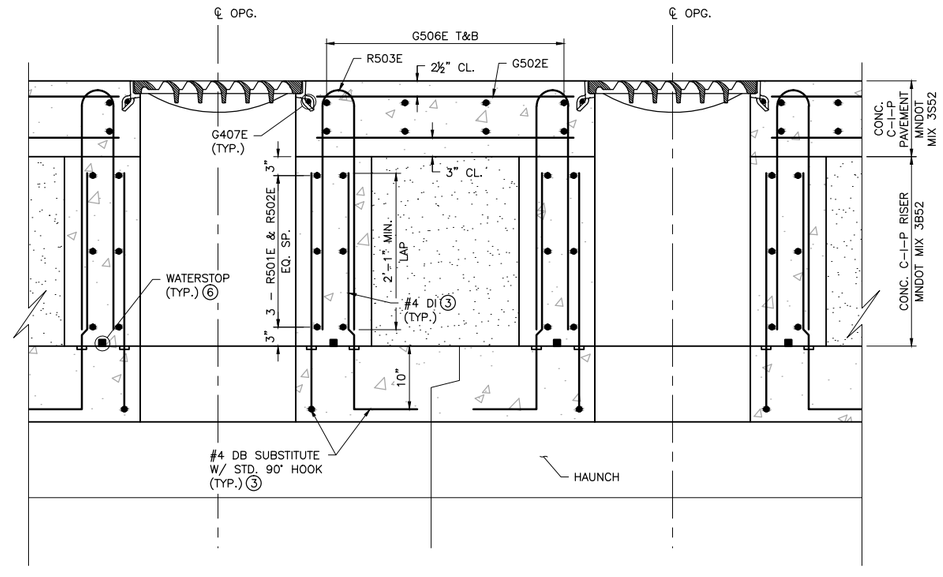

4 / – DETAIL: C–I–P RISER & PAVEMENT REINFORCEMENT

0 3" 6" 9" 1' 2' 3'
SCALE

NOTES:

① EL. "D" ASSUMES TOP SLAB OF BOX CULVERT, T_t = 12". SEE DWG. NO. C14, ADJUST RISER HEIGHT BASED ON BOX CULVERT DESIGN.

② FOR BAR BEND DETAILS & BILL OF REINFORCEMENT, SEE DWG. NO. C17

③ DOWEL BAR (DB) AND DOWEL–IN (DI) TO BE EPOXY. DB TO BE INSTALLED BY PRECAST BOX MANUFACTURER. DI TO BE FURNISHED BY PRECAST BOX MANUFACTURER & INSTALLED DURING RISER CONSTRUCTION.

④ EL. "A" & "B" LOCATED ALONG ℄ OF RISER AT FINAL PAVEMENT ELEVATIONS.

⑤ DB DOWELS TO MATCH DI LOCATIONS SHOWN.

⑥ WATERSTOP: CETCO RX–101 OR EQUAL.

⑦ FOR LEAN MIX BACKFILL REQUIREMENTS SEE MNDOT SPEC. 2520.

ISSUE FOR CONSTRUCTION

NO.	BY	CHK.	APP.	DATE	REVISION DESCRIPTION

I HEREBY CERTIFY THAT THIS PLAN, SPECIFICATION, OR REPORT WAS PREPARED BY ME OR UNDER MY DIRECT SUPERVISION AND THAT I AM A DULY LICENSED PROFESSIONAL ENGINEER UNDER THE LAWS OF THE STATE OF MINNESOTA.

PRINTED NAME Paul K. Nielsen
SIGNATURE Paul K. Nielsen
DATE 9/29/16 LICENSE # 19006

RELEASED TO/FOR	A	B	C	0	1	2	3
CLIENT							
BID							
CONSTRUCTION				9/29/16			

DATE RELEASED

BARR
Corporate Headquarters: Minneapolis, Minnesota Ph: 1–800–632–2277

Project Office:
BARR ENGINEERING CO.
4300 MARKETPOINTE DRIVE
Suite 200
MINNEAPOLIS, MN 55435
Ph: 1–800–632–2277
Fax: (952) 832–2601
www.barr.com

Scale	AS SHOWN
Date	7/18/2016
Drawn	MJJ
Checked	JPH
Designed	PKN
Approved	PKN

CITY OF MINNEAPOLIS
MINNEAPOLIS, MINNESOTA

COMO AVENUE SURGE CHAMBER
MINNEAPOLIS, MINNESOTA

C–I–P RISER & TRENCH GRATE
PLAN, SECTIONS & DETAILS

BARR PROJECT No. 23/27–1478.00
CLIENT PROJECT No. CSW1411STCOMSCD
DWG. No. C16
REV. No. 0

CADD USER: Max J. Jouppe FILE: M:\DESIGN\23271478.00\23271478.00_C16.DWG PLOT SCALE: 1:2 PLOT DATE: 9/29/2016 2:18 PM

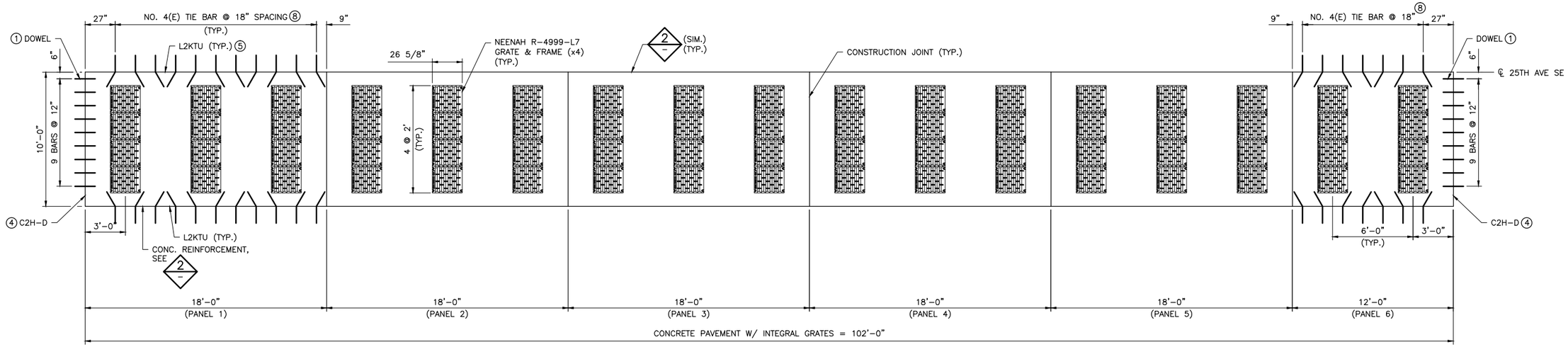

1 PLAN: PAVEMENT JOINTS ②

0 1' 2' 4' 6' 8' 10' 12'
SCALE

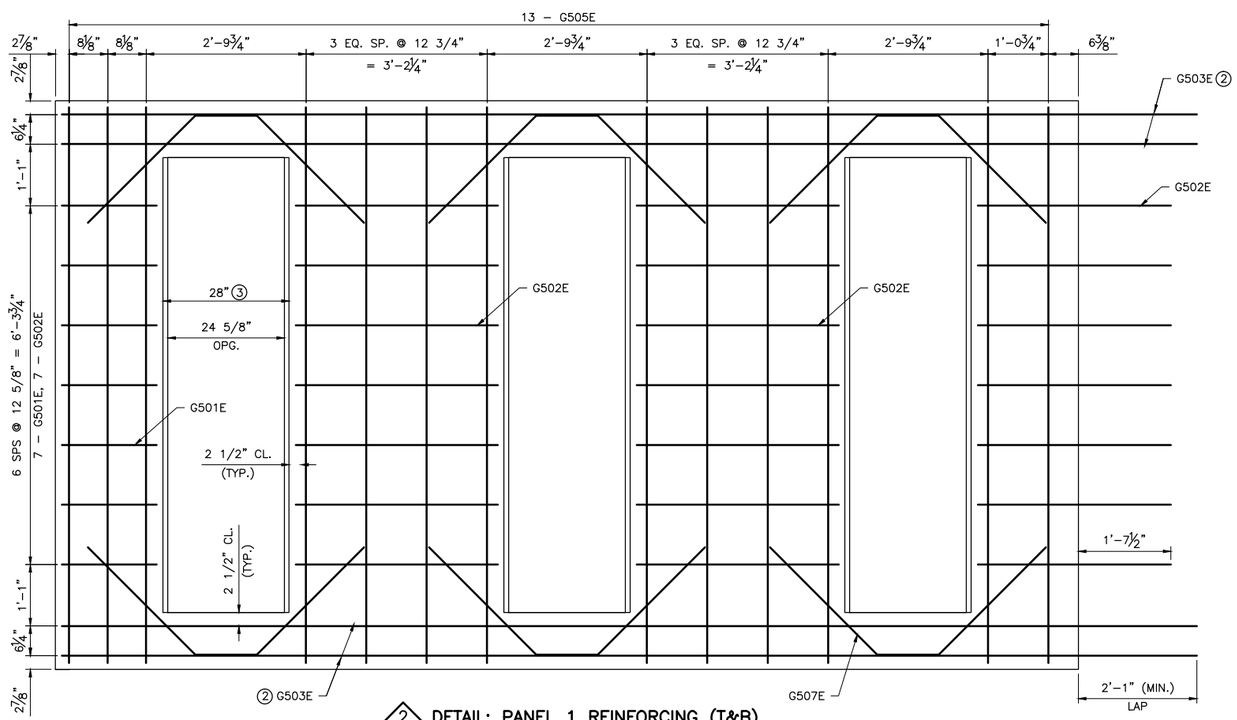

2 DETAIL: PANEL 1 REINFORCING (T&B) (PANELS 2–6 SIMILAR)

0 6" 1' 2' 3' 4'
SCALE

BILL OF REINFORCEMENT FOR RISER & SLAB PANELS

BAR	NO.	LENGTH	LOCATION
G501E	28	1'–5"	PANEL 1, LONG. T&B
G502E	224	3'–3"	PANEL 1–6, LONG. T&B
② G503E	40	20'–1"	PANEL 1–5, LONG. T&B
② G504E	8	11'–9"	PANEL 6, LONG. T&B
G505E	140	9'–7"	PANEL 1–6, TRANS. T&B
G506E	68	6'–5"	PANEL 1–6, OPG. T&B
G407E	272	1'–8"	GRATE FRAME ANCHORS
R501E	102	16'–0"	RISER, HORIZ. O.F.
R502E	102	14'–4"	RISER, HORIZ. I.F.
R503E	408	6'–9"	RISER, VERT. U–BAR
⑥ #5 DB	884	1'–8"	BOX CULVERT DOWEL BARS
⑦ #5 DI	884	2'–5"	RISER, VERT. E.F.
#4(E)	132	2'–6"	LONG. JTS @ L2KTU
DOWEL	18	–	1¼" DOWELS @ C2H–D

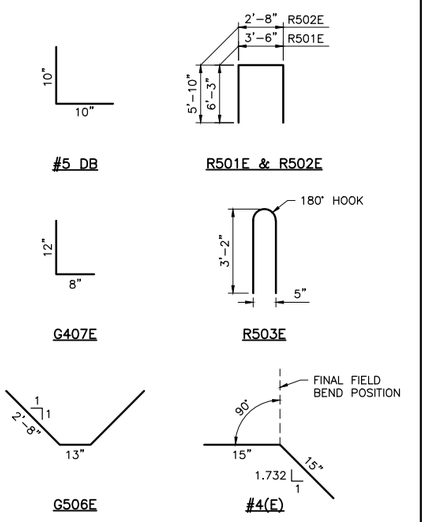

NOTES:

1. FOR TYP. DOWEL BAR ASSEMBLY, SEE MNDOT STD. PLATE 1103K.
2. FOR PANELS 6, REPLACE BAR G503E WITH BAR G504E.
3. DIMENSIONS TO OUTSIDE OF GRATE FRAME BASED ON 3/16" MAX. GAP BETWEEN GRATE & FRAME ON BOTH SIDES.
4. SEE MNDOT STANDARD PLATE 5–297.221 1 OF 2
5. SEE MNDOT STANDARD PLATE 5–297.221 2 OF 2
6. F&I W/ PRECAST CONCRETE BOX CULVERTS (EPOXY COATED).
7. FURNISHED BY BOX CULVERT MANUFACTURER (EPOXY COATED).
8. FINAL FIELD BEND POSITION SHOWN FOR NO. 4(E) TIE BAR.

ISSUE FOR CONSTRUCTION

NO.	BY	CHK.	APP.	DATE	REVISION DESCRIPTION

I HEREBY CERTIFY THAT THIS PLAN, SPECIFICATION, OR REPORT WAS PREPARED BY ME OR UNDER MY DIRECT SUPERVISION AND THAT I AM A DULY LICENSED PROFESSIONAL ENGINEER UNDER THE LAWS OF THE STATE OF MINNESOTA.

PRINTED NAME Paul K. Nielsen
SIGNATURE
DATE 9/29/16 LICENSE # 19006

RELEASED TO/FOR	A	B	C	0	1	2	3
CLIENT							
BID							
CONSTRUCTION				9/29/16			

DATE RELEASED

BARR
Corporate Headquarters: Minneapolis, Minnesota Ph: 1–800–632–2277
Project Office:
BARR ENGINEERING CO.
4300 MARKETPOINTE DRIVE
Suite 200
MINNEAPOLIS, MN 55435
Ph: 1–800–632–2277
Fax: (952) 832–2601
www.barr.com

Scale	AS SHOWN
Date	7/18/2016
Drawn	MJJ
Checked	JPH
Designed	PKN
Approved	PKN

CITY OF MINNEAPOLIS
MINNEAPOLIS, MINNESOTA

COMO AVENUE SURGE CHAMBER
MINNEAPOLIS, MINNESOTA

C–I–P PAVEMENT REINFORCEMENT PLAN & DETAILS

BARR PROJECT No. 23/27–1478.00
CLIENT PROJECT No. CSW1411STCOMSCD
DWG. No. C17
REV. No. 0

CADD USER: Max J. Jouppe FILE: M:\DESIGN\23271478.00\23271478.00_C17.DWG PLOT SCALE: 1:2 PLOT DATE: 9/29/2016 11:42 AM

SUMMARY OF STORM SEWER QUANTITIES

10" PVC PIPE SEWER	5	LIN FT
15" RC PIPE CULVERT CLASS V	12	LIN FT
CONST. DRAINAGE STRUCTURE DESIGN F (MOD.)	1	EACH
TEMPORARY EROSION CONTROL	1	LUMP SUM

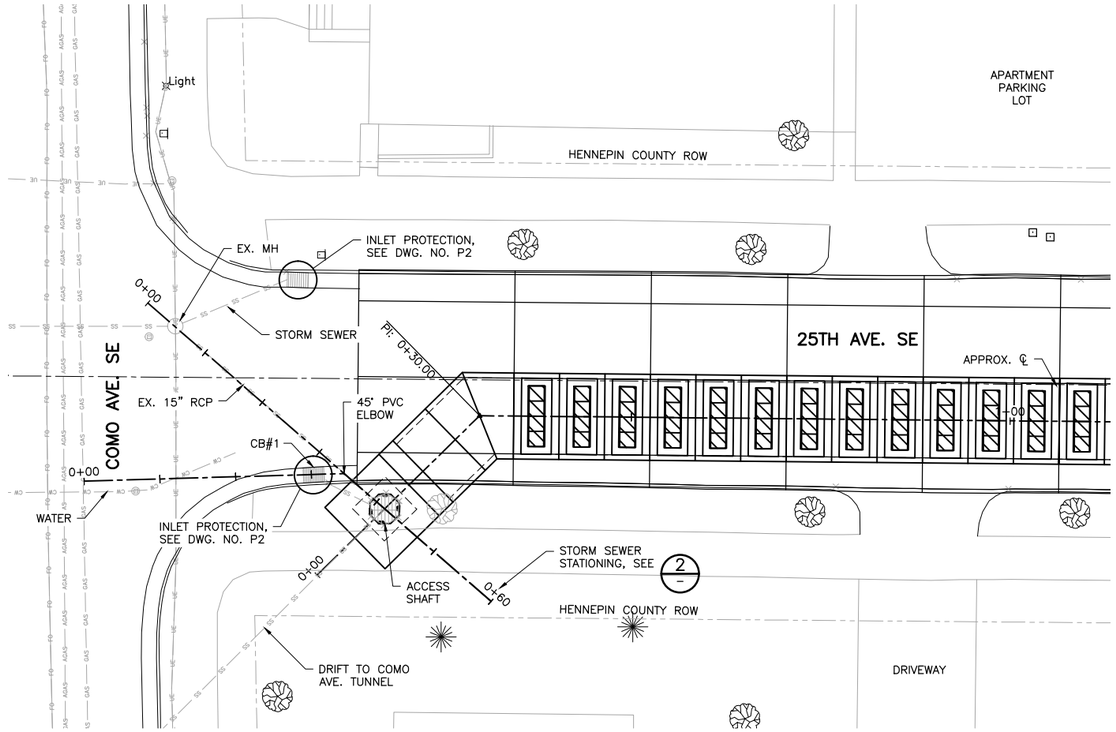

1 PLAN: STORM SEWER ①②

0 10 20
SCALE IN FEET

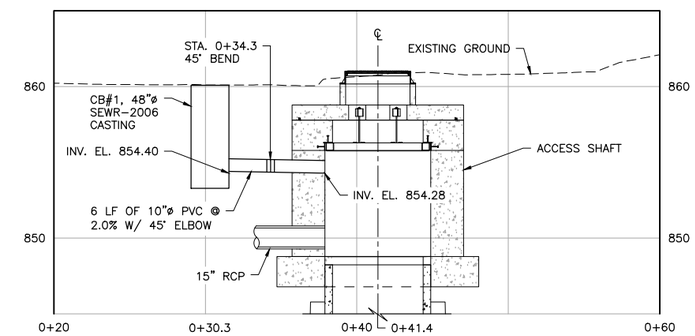

3 PROFILE: PROPOSED PVC STORM SEWER

0 5 10
SCALE IN FEET

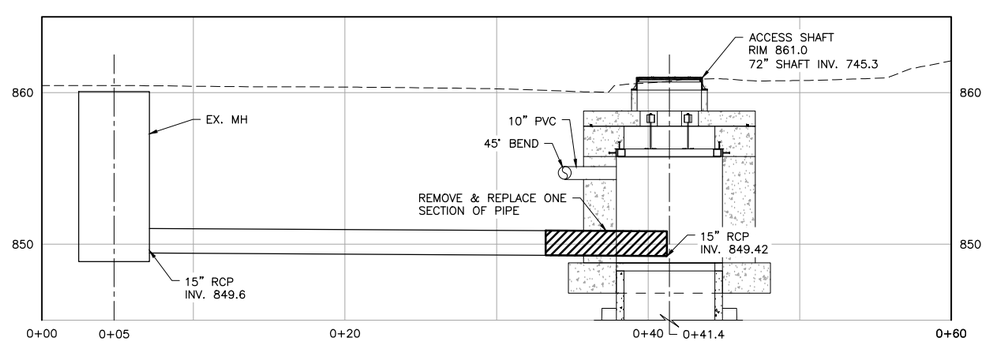

2 PROFILE: EXISTING RCP STORM SEWER

0 5 10
SCALE IN FEET

NOTES:

1. CONFIRM LOCATION OF ALL UNDERGROUND UTILITIES PRIOR TO CONSTRUCTION. NOTIFY OWNER OF ANY DISCREPANCIES.
2. SEE SHEET P2 FOR EROSION CONTROL NOTES AND DETAILS.

ISSUE FOR CONSTRUCTION

NO.	BY	CHK.	APP.	DATE	REVISION DESCRIPTION

I HEREBY CERTIFY THAT THIS PLAN, SPECIFICATION, OR REPORT WAS PREPARED BY ME OR UNDER MY DIRECT SUPERVISION AND THAT I AM A DULY LICENSED PROFESSIONAL ENGINEER UNDER THE LAWS OF THE STATE OF MINNESOTA.

PRINTED NAME Michelle A. Kimble
SIGNATURE
DATE 9/29/16 LICENSE # 42012

RELEASED TO/FOR	A	B	C	0	1	2	3
CLIENT							
BID							
CONSTRUCTION				9/29/16			

DATE RELEASED

BARR
Corporate Headquarters: Minneapolis, Minnesota Ph: 1-800-632-2277

Project Office:
BARR ENGINEERING CO.
4300 MARKETPOINTE DRIVE
Suite 200
MINNEAPOLIS, MN 55435
Ph: 1-800-632-2277
Fax: (952) 832-2601
www.barr.com

Scale	AS SHOWN
Date	08/30/2016
Drawn	JMW
Checked	JAW2
Designed	MAK
Approved	MAK

MINNEAPOLIS PUBLIC WORKS
MINNEAPOLIS, MINNESOTA

COMO AVENUE SURGE CHAMBER
MINNEAPOLIS, MINNESOTA

STORM SEWER
PLAN AND PROFILE

BARR PROJECT No. 23/27-1478.00
CLIENT PROJECT No. CSW1411STCOMSCD
DWG. No. P1
REV. No. 0

CADD USER: Max J. Jouppe FILE: M:\DESIGN\23271478.00\23271478.00_P01.DWG PLOT SCALE: 1:2 PLOT DATE: 9/29/2016 2:59 PM
BAR M:\AutoCAD 2011\AutoCAD 2011 Support\enu\Template\Barr_2011_Template.dwt Plot at 1 10/05/2010 14:03:50

EROSION AND SEDIMENT CONTROL NOTES

INSTALL PERIMETER EROSION CONTROLS AS INDICATED IN PLANS PRIOR TO START OF WORK. HAY BALES ARE NOT ALLOWED AS EROSION & SEDIMENT CONTROL DEVICE IN MINNEAPOLIS.

ESTABLISH ROCK CONSTRUCTION ENTRANCES PRIOR TO BEGINNING LAND DISTURBING ACTIVITIES. 1 1/2" - 3" WASHED AGGREGATE IS RECOMMENDED FOR ROCK ENTRANCES, A GEOTEXTILE FABRIC IS REQUIRED.

REMOVE ALL SOILS AND SEDIMENTS DEPOSITED ONTO PUBLIC AND/OR PRIVATE PAVEMENT AREAS WITHIN 24 HOURS OF DEPOSITION. REMOVAL OF TRACKING MATERIALS SHALL BE COMPLETED AT THE END OF EACH WORK DAY WHEN TRACKING OCCURS. SWEEPING MAY BE ORDERED AT ANY TIME IF CONDITIONS WARRANT. SWEEPING SHALL BE MAINTAINED THROUGHOUT THE DURATION OF CONSTRUCTION AND IN SUCH A MANNER TO PREVENT DUST BEING BLOWN TO ADJACENT PROPERTIES.

INSTALL INLET PROTECTION IN ALL DOWNSTREAM CATCH BASINS WHICH RECEIVE RUNOFF FROM THE DISTURBED AREA. CATCH BASIN INSERTS ARE REQUIRED AT ALL LOCATIONS NOT WITHIN THE DISTURBED AREA WHICH RECEIVE RUNOFF (MNDOT TYPE C INLET PROTECTION). NOTE HAY BALES AND SILT FENCE WRAPPED GRATES ARE NOT EFFECTIVE AND ARE NOT APPROVED FOR USE AS INLET PROTECTION DEVICES.

LOCATE ALL SOIL AND DIRT PILES NO LESS THAN 25 FEET FROM ANY PUBLIC OR PRIVATE ROADWAY OR DRAINAGE CHANNEL. ALL STOCK PILES THAT REMAIN IN PLACE FOR 7 DAYS OR MORE SHALL BE STABILIZED BY MULCHING, VEGETATIVE COVER, TARPING OR OTHER MEANS. TEMPORARY STOCK PILES LOCATED ON PAVED SURFACES MUST BE AT LEAST 2 FEET OR MORE AWAY FROM THE DRAINAGE/GUTTER LINE AND SHALL BE COVERED IF REMAINING MORE THAN 24 HOURS.

MAINTAIN ALL TEMPORARY EROSION CONTROL DEVICES IN PLACE UNTIL THE CONTRIBUTING DRAINAGE AREA HAS BEEN STABILIZED. INSPECT TEMPORARY EROSION AND SEDIMENT CONTROL DEVICES ON A WEEKLY BASIS AND REPLACE DETERIORATED, DAMAGED OR ROTTED EROSION CONTROL DEVICES IMMEDIATELY.

MAINTENANCE OF EROSION AND SEDIMENT CONTROL DEVICES SHALL BE PERFORMED WHENEVER THE DEVICE IS 30% FULL, FAILURE TO MAINTAIN EROSION CONTROL DEVICES MAY LEAD TO FURTHER ENFORCEMENT ACTION. WEEKLY INSPECTIONS REQUIRED AND AFTER EACH 1/2" OR MORE RAIN EVENT WITHIN 24 HRS.

READY MIXED CONCRETE AND BATCH PLANT WASHOUTS PROHIBITED WITHIN THE PUBLIC RIGHT OF WAY, DESIGNATE CONCRETE WASHOUT AND MIXING LOCATIONS IN THE EROSION CONTROL PLANS. UNDER NO CIRCUMSTANCES MAY WASHOUT WATER DRAIN ONTO THE PUBLIC RIGHT OF WAY OR INTO THE PUBLIC STORM DRAIN.

TEMPORARILY OR PERMANENTLY STABILIZE ALL DENUDED AREAS WHICH HAVE BEEN FINISH GRADED WITHIN 7-14 DAYS (SLOPE DEPENDENT). USE SEEDING AND MULCHING, EROSION CONTROL MATTING AND/OR SODDING WITH TEMPORARY STAKING IN GREEN SPACE AREAS. USE EARLY APPLICATION OF GRAVEL BASE FOR AREAS DESIGNATED FOR PAVED SURFACING.

REMOVE ALL TEMPORARY SYNTHETIC, STRUCTURAL AND NON-BIODEGRADABLE EROSION AND SEDIMENT CONTROL AFTER THE SITE HAS UNDERGONE FINAL STABILIZATION AND PERMANENT VEGETATION HAS BEEN ESTABLISHED, MINIMUM VEGETATION COVER OF 70% REQUIRED, ALL TEMPORARY EROSION AND SEDIMENT CONTROL DEVICES SHALL BE MAINTAINED UNTIL THE SITE HAS 70% ESTABLISHED VEGETATIVE COVER AND ALL PAVED AREAS HAVE BEEN STABILIZED WITH THE SELECTED PAVEMENT TYPE.

ADDITIONAL EROSION CONTROL MAY BE REQUIRED BY OTHER PERMITTING AGENCIES, IT IS THE RESPONSIBILITY OF THE PROJECT ENGINEER TO VERIFY THAT THE CITY AND ALL OTHER AGENCY REQUIREMENTS ARE MET.

MINNEAPOLIS CUSTOM
MNDOT SPEC. REF. 2573
NOT TO SCALE

MINNEAPOLIS DEPARTMENT OF PUBLIC WORKS		EROSION CONTROL NOTES	STANDARD PLATE NO. SEWR-8007
DRAWN: DCD	DATE: 8/06		
APPROVED: HRS	DATE: 3/07		

INLET PROTECTION TYPE A
(SILT FENCE TO PROTECT DROP INLETS)
USE WHERE INLET DRAINS AN AREA
WITH SLOPES AT 1:3 OR LESS
(TYPE A SPEC. 3891)

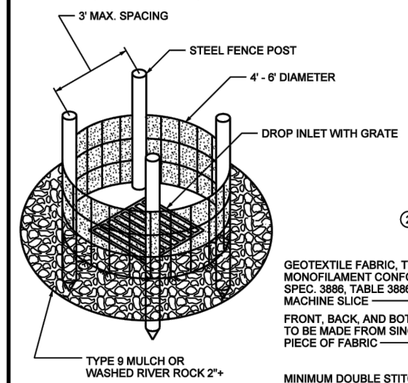

INLET PROTECTION, TYPE C ③
DETAIL
(CAN BE INSTALLED IN ANY INLET TYPE
WITH OR WITHOUT A CURB BOX)

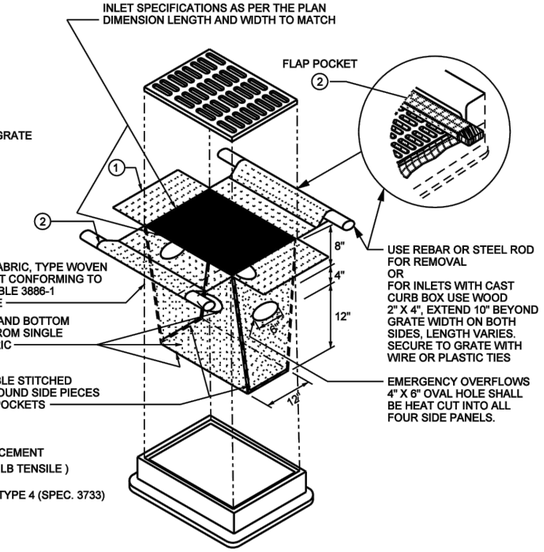

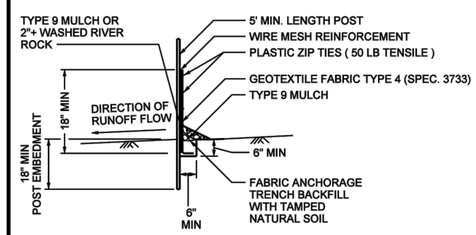

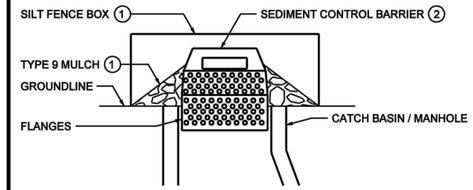

SEDIMENT CONTROL BARRIER ②

NOTES:
THE SEDIMENT CONTROL BARRIER SHALL BE A METAL OR PLASTIC/POLYETHELENE RISER SIZED TO FIT INSIDE THE CATCH BASIN/MANHOLE; HAVE PERFORATIONS TO ALLOW FOR WATER INFILTRATION; HAVE AN OVERFLOW OPENING, FLANGES AND A LID/COVER.

① USE INLET PROTECTION TYPE A OR TYPE 9 MULCH, AS DIRECTED BY THE ENGINEER.

② PAID FOR AS SEDIMENT CONTROL BARRIER.

NOTES:
INLET PROTECTION DEVICES SHALL BE MAINTAINED OR REPLACED AT THE DIRECTION OF THE ENGINEER.

MANUFACTURED ALTERNATIVES APPROVED AND LISTED ON THE MNDOT DEPARTMENT'S EROSION CONTROL PRODUCT ACCEPTABILITY LIST MAY BE SUBSTITUTED.

WHEN REMOVING OR MAINTAINING INLET PROTECTION, CARE SHALL BE TAKEN SO THAT THE SEDIMENT TRAPPED ON THE GEOTEXTILE FABRIC DOES NOT FALL INTO THE INLET. ANY MATERIAL FALLING INTO THE INLET SHALL BE REMOVED IMMEDIATELY.

① FINISHED SIZE, INCLUDING POCKETS WHERE REQUIRED, SHALL EXTEND A MINIMUM OF 10" AROUND THE PERIMETER TO FACILITATE MAINTENANCE OR REMOVAL.

② FLAP POCKETS SHALL BE LARGE ENOUGH TO ACCEPT WOOD 2" X 4".

③ INSTALLATION NOTES:
DO NOT INSTALL PROTECTION IN INLETS SHALLOWER THAN 30", MEASURED FROM THE BOTTOM OF THE INLET TO THE TOP OF THE GRATE.

TRIM EXCESS FABRIC IN THE FLOW LINE TO WITHIN 3" OF THE GRATE.

THE INSTALLED BAG SHALL HAVE A MINIMUM SIDE CLEARANCE, MAXIMUM OF 4" FROM THE BOTTOM OF THE BAG. BETWEEN THE INLET WALLS AND THE BAG, MEASURED AT THE BOTTOM OF THE OVERFLOW HOLES, OF 3". WHERE NECESSARY THE CONTRACTOR SHALL CLINCH THE BAG, USING PLASTIC ZIP TIES, TO ACHIEVE THE 3" CLEARANCE. THE TIES SHALL BE PLACED AT A MAXIMUM OF 4" FROM THE BOTTOM OF THE BAG.

REFERENCES:
MNDOT DRAFT PLATES

MINNEAPOLIS CUSTOM
MNDOT SPEC. REF. 3891
NOT TO SCALE

MINNEAPOLIS DEPARTMENT OF PUBLIC WORKS		INLET PROTECTION TYPE A & C	STANDARD PLATE NO. SEWR-8003
DRAWN: DCD	DATE: 1/05		
APPROVED: HRS	DATE: 4/07		

ISSUE FOR CONSTRUCTION

NO.	BY	CHK.	APP.	DATE	REVISION DESCRIPTION

I HEREBY CERTIFY THAT THIS PLAN, SPECIFICATION, OR REPORT WAS PREPARED BY ME OR UNDER MY DIRECT SUPERVISION AND THAT I AM A DULY LICENSED PROFESSIONAL ENGINEER UNDER THE LAWS OF THE STATE OF MINNESOTA.

PRINTED NAME Michelle A. Kimble
SIGNATURE Michelle A. Kimble
DATE 9/29/16 LICENSE # 42012

RELEASED TO/FOR	A	B	C	0	1	2	3
CLIENT							
BID							
CONSTRUCTION				9/29/16			

DATE RELEASED

BARR
Corporate Headquarters: Minneapolis, Minnesota Ph: 1-800-632-2277

Project Office:
BARR ENGINEERING CO.
4300 MARKETPOINTE DRIVE
Suite 200
MINNEAPOLIS, MN 55435
Ph: 1-800-632-2277
Fax: (952) 832-2601
www.barr.com

Scale	AS SHOWN
Date	7/18/2016
Drawn	MJJ
Checked	JMW
Designed	MAK
Approved	MAK

CITY OF MINNEAPOLIS
MINNEAPOLIS, MINNESOTA

COMO AVENUE SURGE CHAMBER
MINNEAPOLIS, MINNESOTA

EROSION & SEDIMENT CONTROL DETAILS

BARR PROJECT No. 23/27-1478.00
CLIENT PROJECT No. CSW1411STCOMSCD
DWG. No. P2
REV. No. 0

CADD USER: Max J. Jouppe FILE: M:\DESIGN\23271478.00\23271478.00_P02.DWG PLOT SCALE: 1:2 PLOT DATE: 9/29/2016 11:48 AM

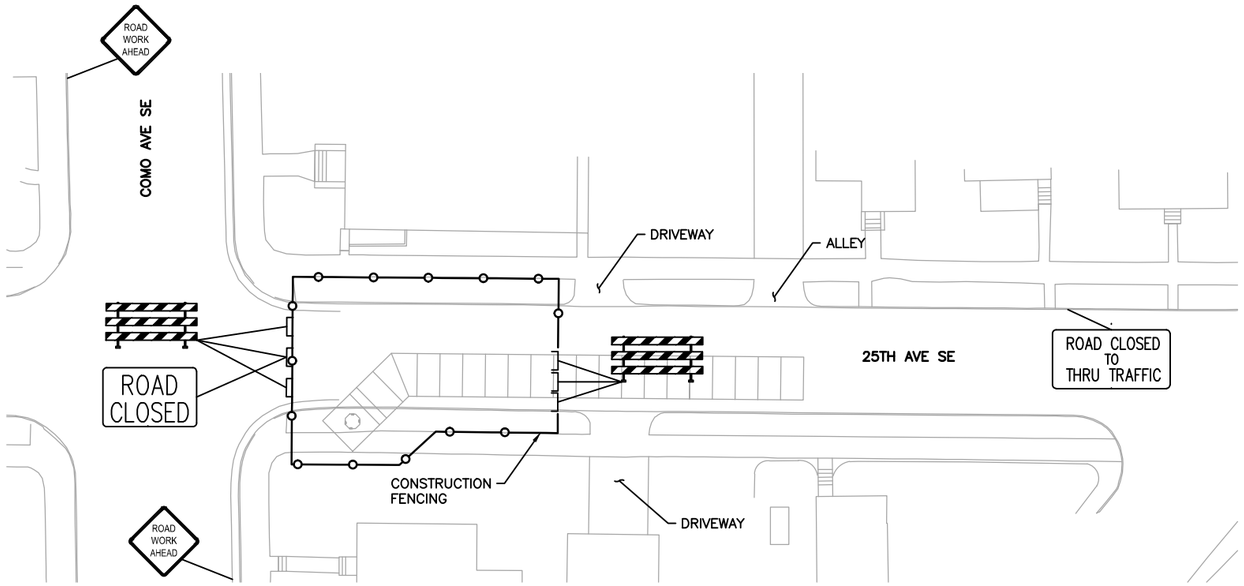

1 PLAN: TEMPORARY TRAFFIC CONTROL – SHAFT STRUCTURE

0 30 60
SCALE IN FEET

TRAFFIC SIGNS			
QTY.	MNDOT SIGN NO.	SIGN SIZE	SIGN MESSAGE
4	W20–1	48" x 48"	ROAD WORK AHEAD
2	R11–4	60" x 30"	ROAD CLOSED TO THRU TRAFFIC
1	R11–2	48" x 30"	ROAD CLOSED
3	BARRICADE	8.2 FT WIDE	
1	W20–4	48" x 48"	ONE LANE ROAD AHEAD

NOTES:

1. ALL TRAFFIC CONTROL DEVICES AND SIGNAGE SHALL CONFORM TO THE MN MUTCD, INCLUDING FIELD MANUAL FOR TEMPORARY TRAFFIC CONTROL ZONE LAYOUTS.
2. SIGNS NOT MOUNTED ON BARRICADES SHALL BE MOUNTED ON A TEMPORARY SUPPORT.
3. THE NUMBER OF BARRICADES REQUIRED AND PLACEMENT WILL BE SUBJECT TO APPROVAL BY THE CITY SIDEWALK INSPECTOR AND MAY ALSO BE SUBJECT TO APPROVAL BY THE CITY LAND USE ADMINISTRATOR.
4. ALL TRAFFIC CONTROL SIGNS SHALL BE PLACED BY CITY.
5. CITY SHALL COORDINATE MAINTENANCE OF DRIVEWAY ACCESS TO LOCAL RESIDENTS DURING CONSTRUCTION.

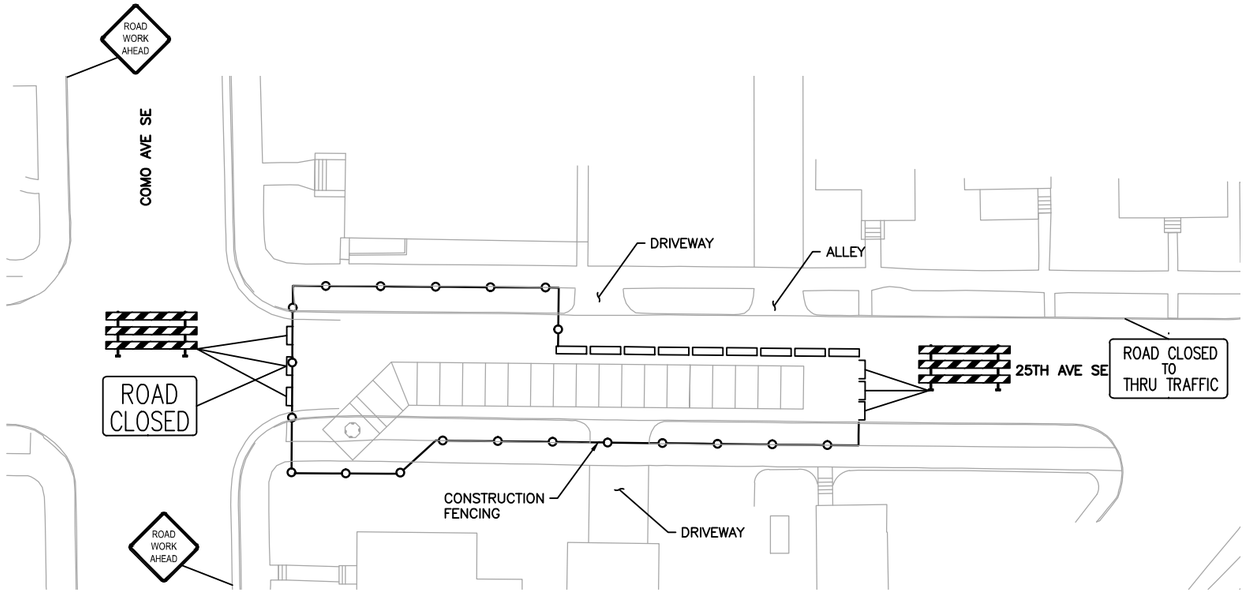

2 PLAN: TEMPORARY TRAFFIC CONTROL – BOX CULVERTS

0 30 60
SCALE IN FEET

ISSUE FOR CONSTRUCTION

NO.	BY	CHK.	APP.	DATE	REVISION DESCRIPTION

I HEREBY CERTIFY THAT THIS PLAN, SPECIFICATION, OR REPORT WAS PREPARED BY ME OR UNDER MY DIRECT SUPERVISION AND THAT I AM A DULY LICENSED PROFESSIONAL ENGINEER UNDER THE LAWS OF THE STATE OF MINNESOTA.

PRINTED NAME Joe A. Weina
SIGNATURE
DATE 9/29/16 LICENSE # 49911

RELEASED TO/FOR	A	B	C	0	1	2	3
CLIENT							
BID							
CONSTRUCTION				9/29/16			

DATE RELEASED

BARR
Corporate Headquarters: Minneapolis, Minnesota Ph: 1–800–632–2277
Project Office:
BARR ENGINEERING CO.
4300 MARKETPOINTE DRIVE
Suite 200
MINNEAPOLIS, MN 55435
Ph: 1–800–632–2277
Fax: (952) 832–2601
www.barr.com

Scale	AS SHOWN
Date	8/15/2016
Drawn	MJJ
Checked	JPH
Designed	JAW2
Approved	JAW2

CITY OF MINNEAPOLIS
MINNEAPOLIS, MINNESOTA

COMO AVENUE SURGE CHAMBER
MINNEAPOLIS, MINNESOTA

TEMPORARY TRAFFIC CONTROL PLAN

BARR PROJECT No. 23/27–1478.00
CLIENT PROJECT No. CSW1411STCOMSCD
DWG. No. T1
REV. No. 0

CADD USER: Max J. Jouppe FILE: M:\DESIGN\23271478.00\23271478.00_T01.DWG PLOT SCALE: 1:2 PLOT DATE: 9/29/2016 9:48 AM

Barr Engineering Company
4300 MarketPointe Drive Suite 200
Minneapolis, MN 55435
Telephone: 952-832-2600

LOG OF BORING B-1-16

Associated Boring #: SB-1

Sheet 1 of 1

Project:	Como Surge Chamber	Surface Elevation:	
Job No.:	23271478	Drilling Method:	HSA
Location:	Minneapolis, MN	Sampling Method:	SS
Coordinates:	Lat: 44.98776° Long: 93.21780°	Completion Depth:	31.0 ft
Datum:			

Surface Elev.:

Depth, feet	MATERIAL DESCRIPTION	Sample No.	% Recovery	SPT, N value or RQD %
0	POORLY GRADED SAND (SP): fine to medium grained; brown to tan; moist; subgrade, decreasing silt with depth.	1	100	8
		2	0	10
5		3	100	7
		4	100	29
10	POORLY GRADED SAND WITH GRAVEL (SP): fine to medium grained; light tan to brown; moist; large gravel fragments, some course sand at 8'. (7.8ft)	5	22	35
	LEAN CLAY WITH GRAVEL (CL): brown-gray; wet to saturated; small to medium gravel, 2" wet gravel seam at 11.5'. (11.5ft)	6	67	47
15	POORLY GRADED GRAVEL (GP): multi-colored; wet to saturated; small to medium gravel with large fragments at 16'. (15.0ft)	7	100	35
	POORLY GRADED GRAVEL WITH CLAY (GP-GC): gray; wet to saturated; large gravel fragments with trace clay and sand. (16.5ft)	8	44	27
20	POORLY GRADED GRAVEL (GP): gray; saturated; small to large gravel, with fines. (18.8ft)	9	67	22
	POORLY GRADED GRAVELLY SAND WITH CLAY (SP-SC): brown-purple; saturated. (21.8ft)	10	67	50/5
25	WEATHERED SILTSTONE (CL/ML): brown-purple; saturated; very dense, with large gravel. (22.8ft)	11	67	50/5
	WEATHERED CLAYSTONE (CL): gray-blue to green-blue; saturated; gravel, competent fragments throughout, fragment of shale at 28.5'. (27.8ft)	12	33	30
30		13		57
	Bottom of Boring at 31.0 feet (31.0ft)			

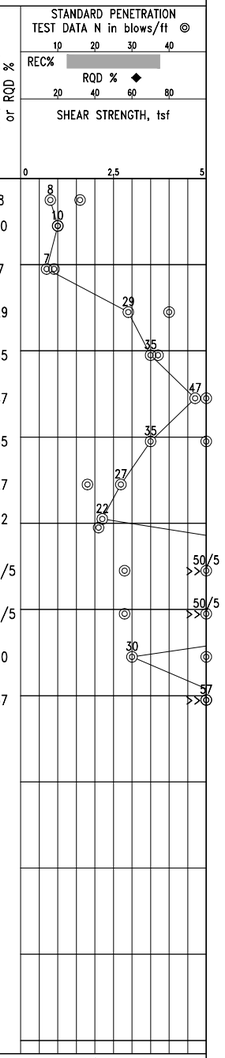

Date Boring Started:	5/10/16 11:00 am	Water Levels (ft)	Remarks: Drilling in Road, 4' from curb and 32' from Como Ave
Date Boring Completed:	5/10/16 12:30 pm	At Time of Drilling 16.0	
Logged By:	GFS		
Drilling Contractor:	Glacial Ridge		
Drill Rig:	CME 75		Weather: Overcast

Barr Engineering Company
4300 MarketPointe Drive Suite 200
Minneapolis, MN 55435
Telephone: 952-832-2600

LOG OF BORING B-2-16

Associated Boring #: SB-2

Sheet 1 of 1

Project:	Como Surge Chamber	Surface Elevation:	
Job No.:	23271478	Drilling Method:	HSA
Location:	Minneapolis, MN	Sampling Method:	SS
Coordinates:	Lat: 44.98771° Long: 93.21782°	Completion Depth:	31.0 ft
Datum:			

Surface Elev.:

Depth, feet	MATERIAL DESCRIPTION	Sample No.	% Recovery	SPT, N value or RQD %
0	POORLY GRADED SAND (SP): fine to medium grained; tan with rust to light yellow; moist; trace silt, subgrade, fairly clean.	14	100	16
		15	100	10
5		16	100	9
	POORLY GRADED SAND WITH GRAVEL (SP): fine to medium grained; red-brown with multi-colored gravel; moist; transisitions into sand with small to large gravel at 9'. At 9.5', sand with clay and large gravel fragments. (6.5ft)	17	56	40
10		18	56	37
	POORLY GRADED GRAVEL (GP): Multi-colored to gray; moist to wet; small to large gravel, trace sand and fines. (11.5ft)	19	67	50
15	At 17', medium to large gravel, rounded, with fractured gravel and trace sand and fines.	20	22	64
		21	28	18
20	At 19.5', mostly large fractured gravel with some small rounded gravel, sand, and fines.	22	22	21
		23	67	28
25	WEATHERED MUDSTONE (CL): Multi-colored with green-blue claystone; saturated; fractured, slightly weathered. (25.8ft)	24	44	28
	POORLY GRADED GRAVEL (GP): Multi-colored; saturated; large fractured gravel with small rounded gravel and sand with trace fines. (26.5ft)	25	44	50/5
30	POORLY GRADED GRAVEL WITH WEATHERED SANDSTONE (GP): gray to multi-colored; saturated; large fractured gravel with sand and fines. (29.0ft)	26		50/6
	Bottom of Boring at 31.0 feet (31.0ft)			

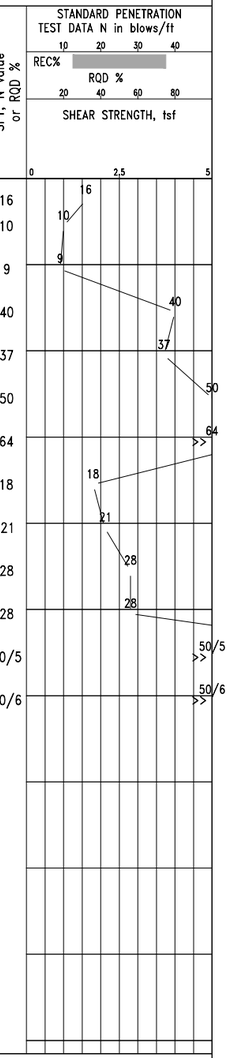

Date Boring Started:	5/10/16 1:00 pm	Water Levels (ft)	Remarks: 39' down 25th Ave from B-1-16; could not go farther without tower hitting tree
Date Boring Completed:	5/10/16 3:00 pm	At Time of Drilling 17.0	
Logged By:	GFS		
Drilling Contractor:	Glacial Ridge		
Drill Rig:	CME 75		Weather: Overcast

ISSUE FOR CONSTRUCTION

NO.	BY	CHK.	APP.	DATE	REVISION DESCRIPTION

	A	B	C	0	1	2	3
CLIENT							
BID							
CONSTRUCTION				9/29/16			
RELEASED TO/FOR	DATE RELEASED						

BARR
Corporate Headquarters: Minneapolis, Minnesota Ph: 1-800-632-2277

Project Office:
BARR ENGINEERING CO.
4300 MARKETPOINTE DRIVE
Suite 200
MINNEAPOLIS, MN 55435
Ph: 1-800-632-2277
Fax: (952) 832-2601
www.barr.com

Scale	AS SHOWN
Date	6/30/2016
Drawn	JMW
Checked	JAW2
Designed	JAW2
Approved	PKN

MINNEAPOLIS PUBLIC WORKS
MINNEAPOLIS, MINNESOTA

COMO AVENUE SURGE CHAMBER
MINNEAPOLIS, MINNESOTA

SOIL BORINGS

BARR PROJECT No. 23/27-1478.00
CLIENT PROJECT No. CSW1411STCOMSCD
DWG. No. B1
REV. No. 0

CADD USER: Max J. Jouppe FILE: M:\DESIGN\23271478.00\2327147800_B01.DWG PLOT SCALE: 1:2 PLOT DATE: 9/29/2016 12:15 PM

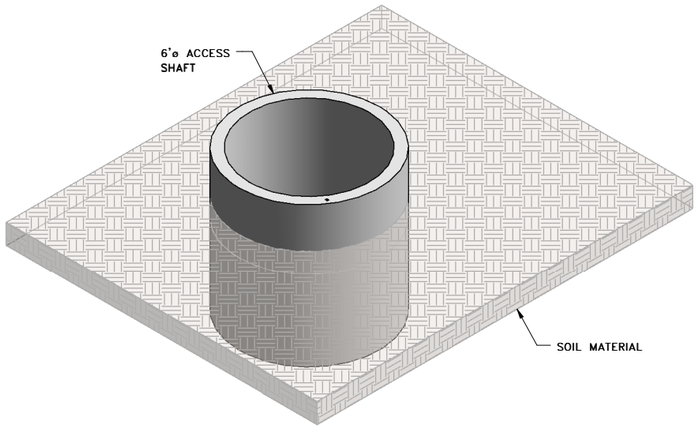

1 ACCESS SHAFT AFTER REMOVALS

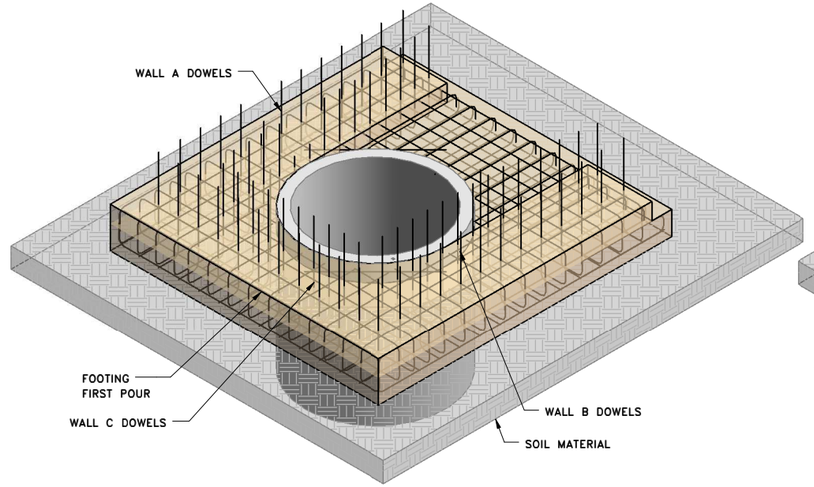

2 FOOTING REINFORCING

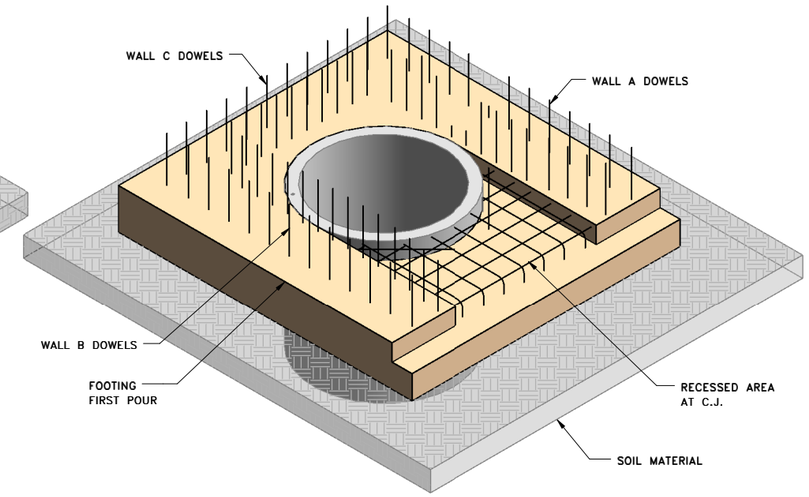

3 FOOTING POUR 1

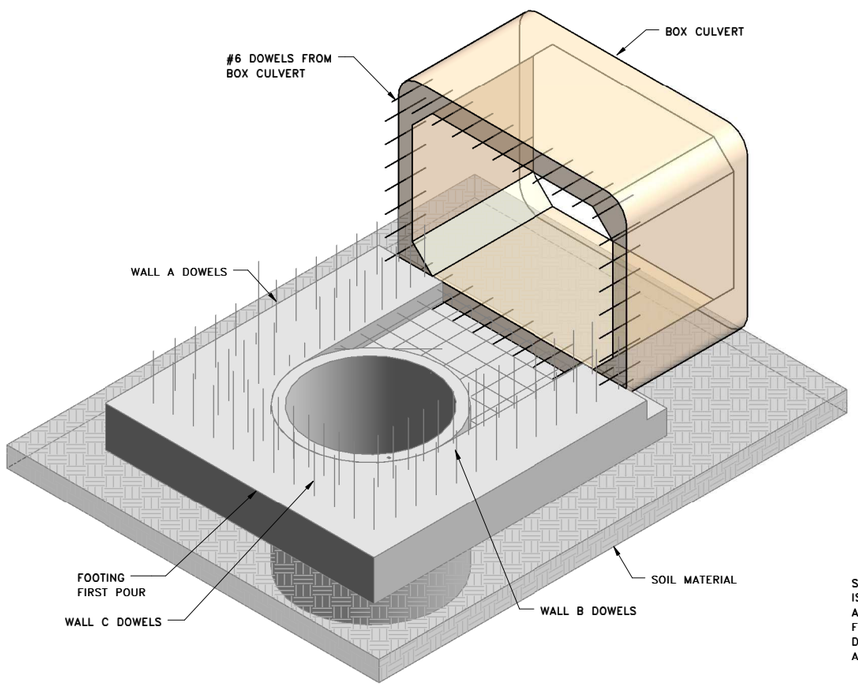

4 BOX CULVERT PLACEMENT

SHEET NOTES:
ISOMETRIC VIEWS ARE PRESENTED FOR IMFORMATION ONLY AND SHOULD NOT, UNDER ANY CIRCUMSTANCES, BE USED FOR CONSTRUCTION, QUANTITY COMPUTATIONS, OR ANY OTHER DETAILED CONSTRUCTION RELATED TASK. ISOMETRIC VIEWS ARE NOT TO SCALE AND SHOULD NOT BE SCALED.

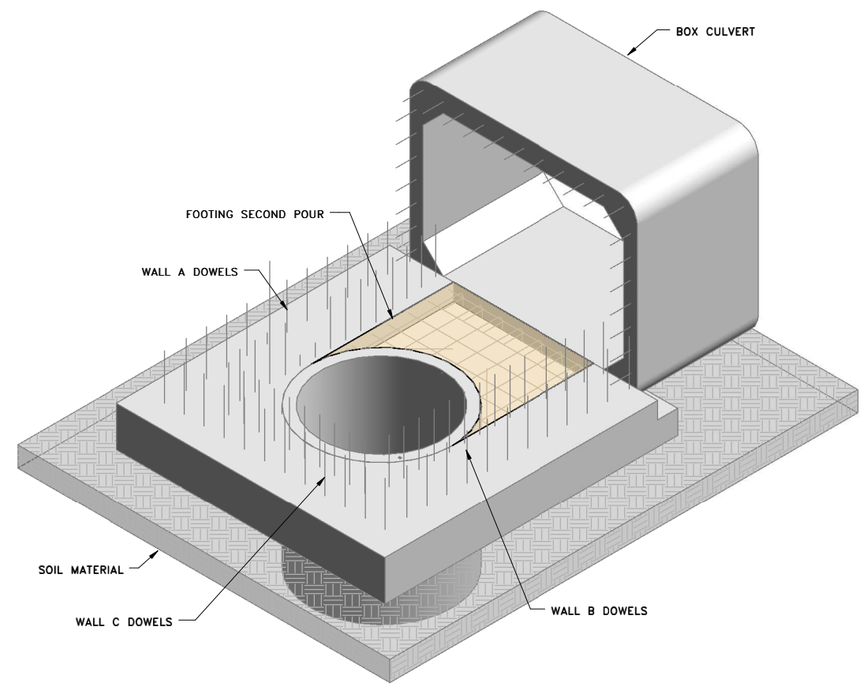

5 FOOTING POUR 2

NO.	BY	CHK.	DATE	REVISION DESCRIPTION

	A	B	C	0	1	2	3
CLIENT							
BID							
CONSTRUCTION				09/29			
RELEASED TO/FOR	DATE RELEASED						

BARR
Corporate Headquarters: Minneapolis, Minnesota Ph: 1-800-632-2277
Project Office: BARR ENGINEERING CO. 4700 WEST 77TH STREET MINNEAPOLIS, MN 55435
Ph: 1-800-225-1966 Fax: (218) 262-3460 www.barr.com

Scale	N.T.S.
Date	09/11/2016
Drawn	JAM4
Checked	PKN
Designed	PKN
Approved	PKN

CITY OF MINNEAPOLIS
MINNEAPOLIS, MINNESOTA

COMO AVENUE SURGE CHAMBER
MINNEAPOLIS, MINNESOTA

C-I-P SHAFT CONSTRUCTION SEQUENCE SCHEMATICS

BARR PROJECT No. 23/27-1478.00
CLIENT PROJECT No. CWS1411STCOMSCD
DWG No. R-1
REV No. 0

9/28/2016 5:47:38 PM P:\Mpls\23 MN\27\23271478 Como Ave Pressure Surge Cham\WorkFiles\3D Model\Surge Chamber Rebar Model.rvt

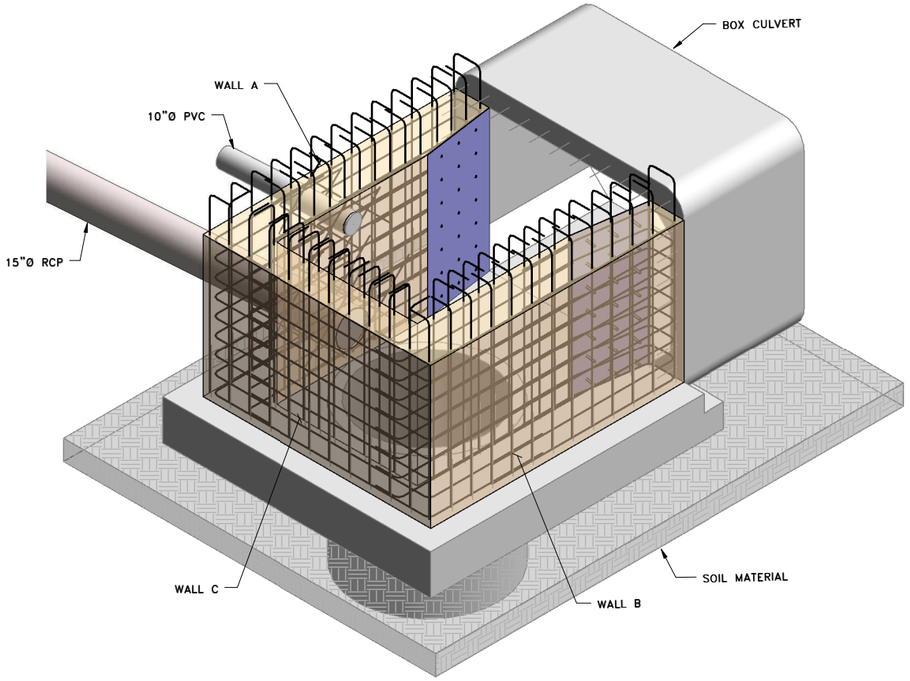

1 WALL REINFORCING

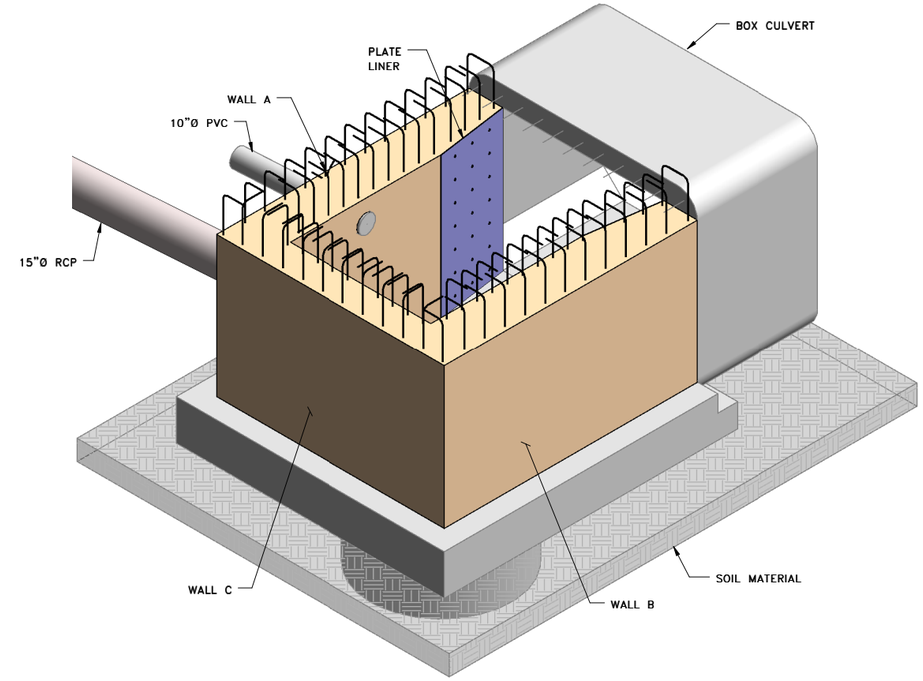

2 WALL POUR 3

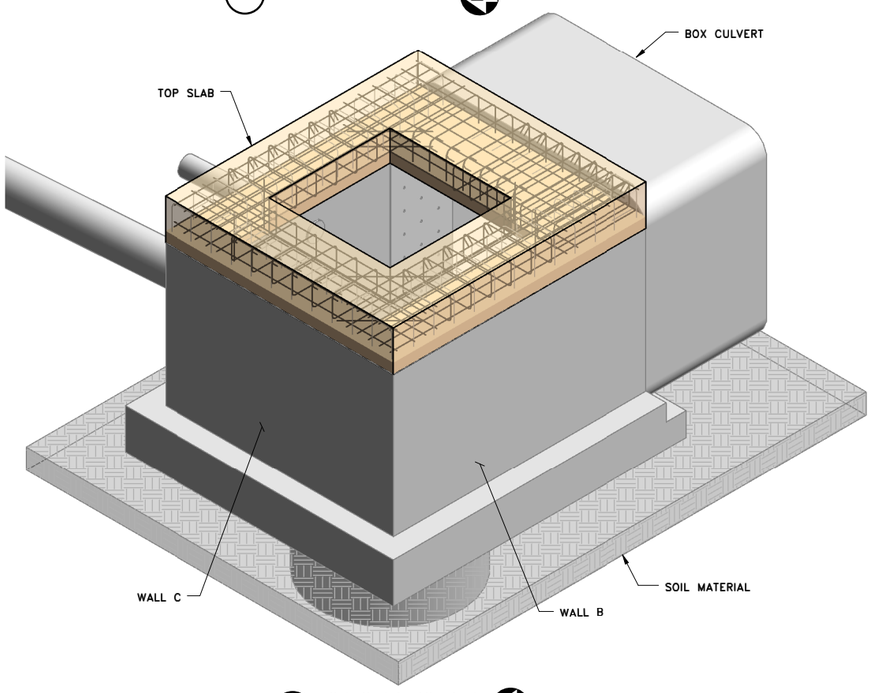

3 TOP SLAB POUR 4

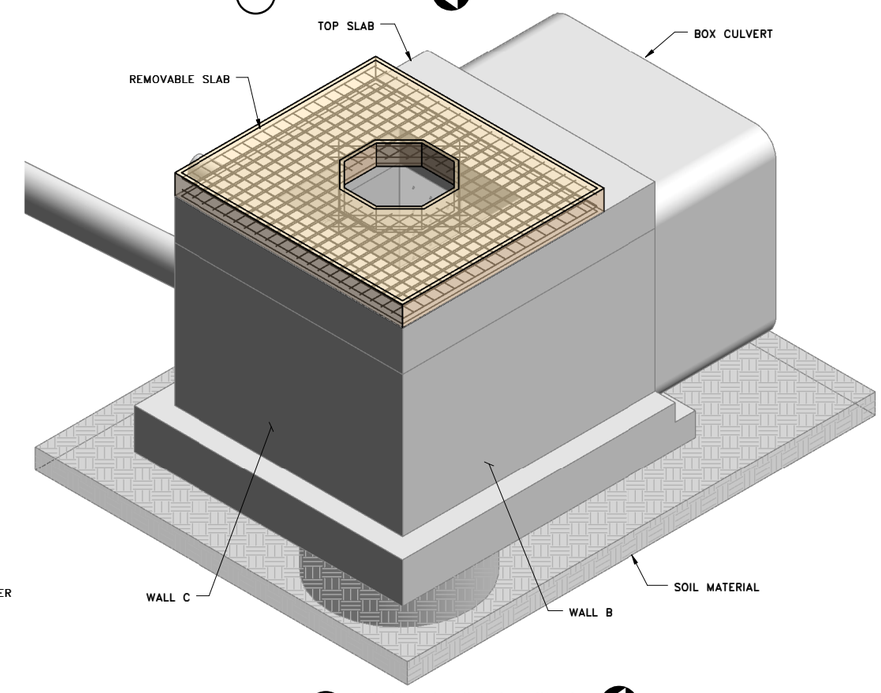

4 INSTALL REMOVABLE SLAB

SHEET NOTES:
ISOMETRIC VIEWS ARE PRESENTED FOR IMFORMATION ONLY AND SHOULD NOT, UNDER ANY CIRCUMSTANCES, BE USED FOR CONSTRUCTION, QUANTITY COMPUTATIONS, OR ANY OTHER DETAILED CONSTRUCTION RELATED TASK. ISOMETRIC VIEWS ARE NOT TO SCALE AND SHOULD NOT BE SCALED.

NO.	BY	CHK.	DATE	REVISION DESCRIPTION	RELEASED TO/FOR	A	B	C	0	1	2	3
					CLIENT							
					BID							
					CONSTRUCTION				09/29			
						DATE RELEASED						

BARR
Corporate Headquarters: Minneapolis, Minnesota Ph: 1-800-632-2277
Project Office: BARR ENGINEERING CO. 4700 WEST 77TH STREET MINNEAPOLIS, MN 55435
Ph: 1-800-225-1966 Fax: (218) 262-3460 www.barr.com

Scale	N.T.S.
Date	09/11/2016
Drawn	JAM4
Checked	PKN
Designed	PKN
Approved	PKN

CITY OF MINNEAPOLIS
MINNEAPOLIS, MINNESOTA

COMO AVENUE SURGE CHAMBER
MINNEAPOLIS, MINNESOTA

C-I-P SHAFT CONSTRUCTION SEQUENCE SCHEMATICS

BARR PROJECT No. 23/27-1478.00
CLIENT PROJECT No. CWS1411STCOMSCD
DWG No. R-2
REV No. 0

9/28/2016 5:49:08 PM P:\Mpls\23 MN\27\23271478 Como Ave Pressure Surge Cham\WorkFiles\3D Model\Surge Chamber Rebar Model.rvt

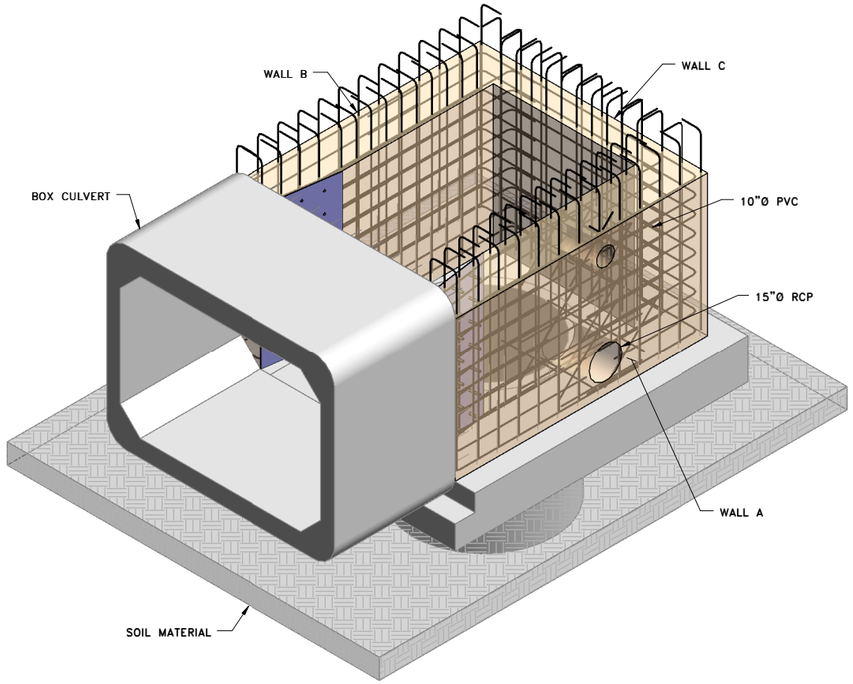

1 WALL REINFORCING

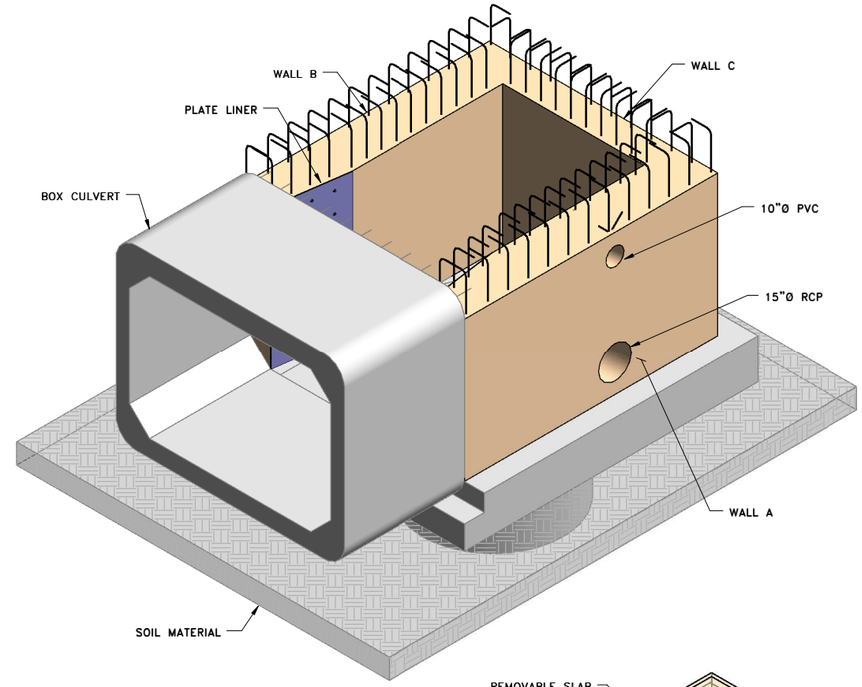

2 WALL POUR 3

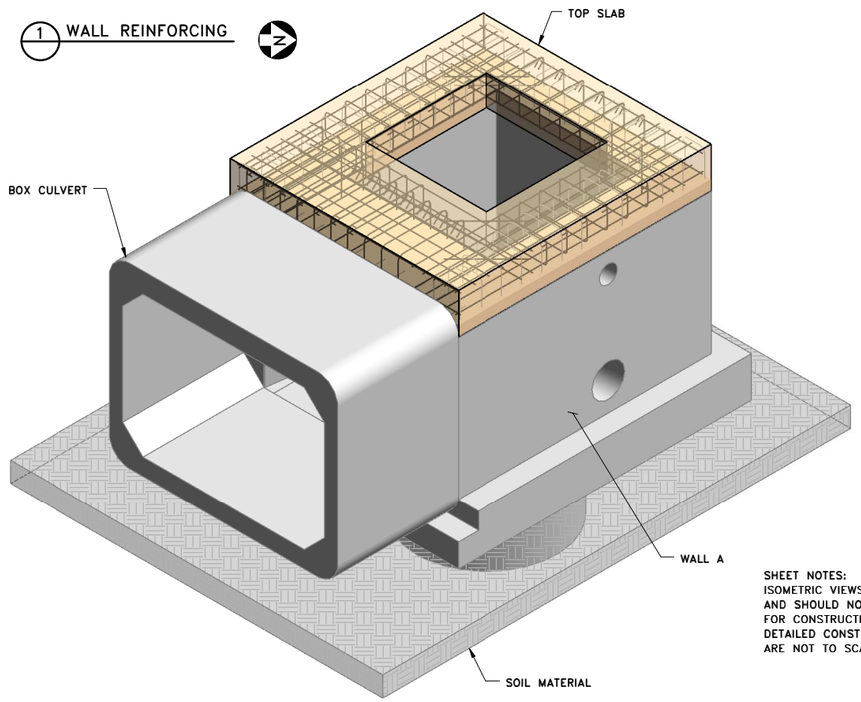

3 TOP SLAB POUR 4

SHEET NOTES:
ISOMETRIC VIEWS ARE PRESENTED FOR IMFORMATION ONLY AND SHOULD NOT, UNDER ANY CIRCUMSTANCES, BE USED FOR CONSTRUCTION, QUANTITY COMPUTATIONS, OR ANY OTHER DETAILED CONSTRUCTION RELATED TASK. ISOMETRIC VIEWS ARE NOT TO SCALE AND SHOULD NOT BE SCALED.

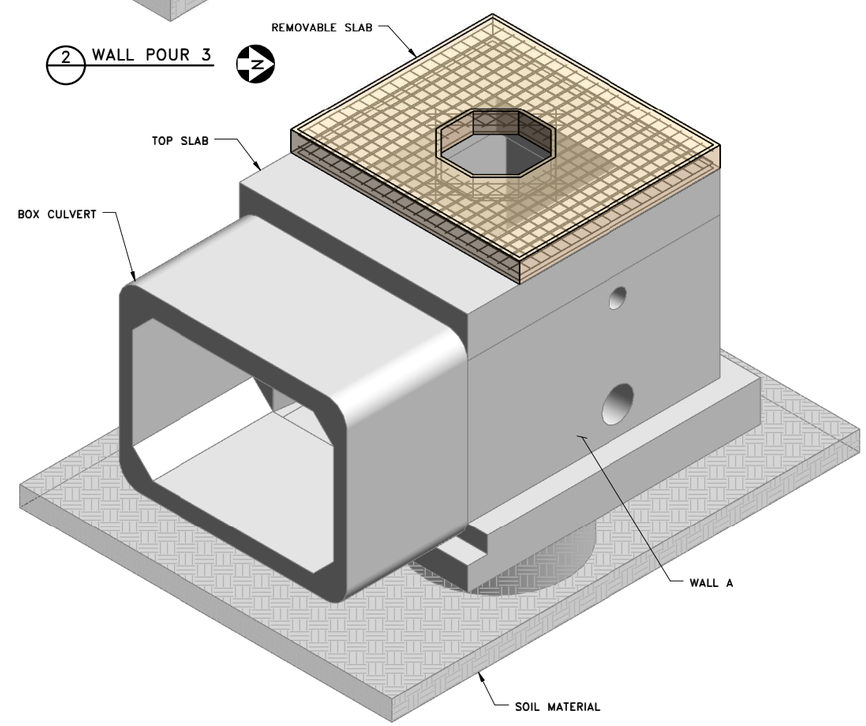

4 INSTALL REMOVABLE SLAB

NO.	BY	CHK.	DATE	REVISION DESCRIPTION	RELEASED TO/FOR	A	B	C	0	1	2	3
					CLIENT							
					BID							
					CONSTRUCTION				09/29			
					DATE RELEASED							

BARR
Corporate Headquarters: Minneapolis, Minnesota Ph: 1-800-632-2277

Project Office:
BARR ENGINEERING CO.
4700 WEST 77TH STREET
MINNEAPOLIS, MN 55435
Ph: 1-800-225-1966
Fax: (218) 262-3460
www.barr.com

Scale	N.T.S.
Date	09/11/2016
Drawn	JAM4
Checked	PKN
Designed	PKN
Approved	PKN

CITY OF MINNEAPOLIS
MINNEAPOLIS, MINNESOTA

COMO AVENUE SURGE CHAMBER
MINNEAPOLIS, MINNESOTA

C-I-P SHAFT CONSTRUCTION SEQUENCE SCHEMATICS

BARR PROJECT No. 23/27-1478.00
CLIENT PROJECT No. CWS1411STCOMSCD
DWG No. R-3
REV No. 0

9/28/2016 5:49:50 PM P:\Mpls\23 MN\27\23271478 Como Ave Pressure Surge Cham\WorkFiles\3D Model\Surge Chamber Rebar Model.rvt

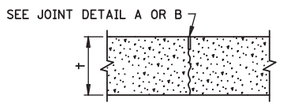

C1U & C2H

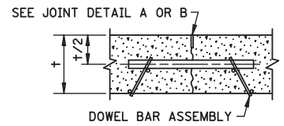

C1U-D & C2H-D

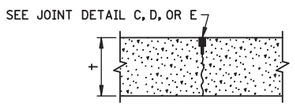

C3P, C4S, C5H

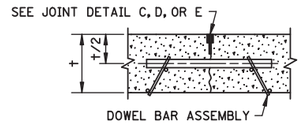

C3P-D, C4S-D, C5H-D

CONTRACTION JOINT REFERENCE, DETAIL & SEALER SPEC. TABLE

JOINT REFERENCE		JOINT DETAIL	JOINT SEALER SPEC.	JOINT WIDTH
WITHOUT DOWELS	WITH DOWELS			
C1U	C1U-D	A	UNSEALED	1/8"
C2H	C2H-D	B	3725	1/8"
C3P	C3P-D	C	3721	3/8"
C4S	C4S-D	D	3722	3/8"
C5H	C5H-D	E	3725	3/8"

LEGEND — EXAMPLE (C2H-D)
- C = CONTRACTION JOINT
- NO. = JOINT REFERENCE
- U = UNSEALED
- H = HOT POURED
- P = PREFORMED
- S = SILICONE
- -D = DOWEL BARS

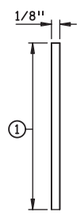

JOINT DETAIL A
SAWED & UNSEALED

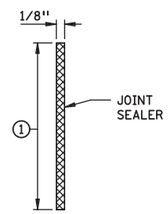

JOINT DETAIL B ③
SAWED & SEALED

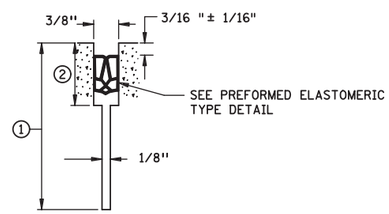

JOINT DETAIL C ③
SAWED AND SEALED

DOWEL BAR DIAMETER TABLE

PAVEMENT THICKNESS †	DOWEL BAR DIAMETER
LESS THAN 6"	NONE
6" - 6 1/2"	1" OR NONE
7" - 7 1/2"	1"
8" - 10"	1 1/4"
10 1/2" AND GREATER	1 1/2"

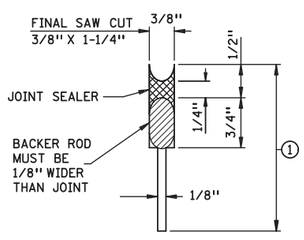

JOINT DETAIL D ③④
SAWED AND SEALED

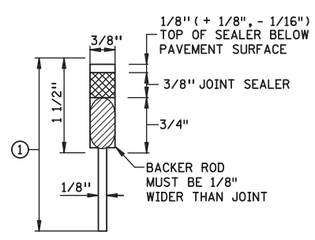

JOINT DETAIL E ③⑤
SAWED AND SEALED

REQUIRED DIMENSIONS

JOINT TYPE	TRANSVERSE
NOMINAL SEALER SIZE	11/16" USE IN ALL 3/8" JOINTS
a	0.69" + 0.13" - 0.05"
b	0.08" ± 0.02"
c	0.25" MIN.
d	0.63" MIN.

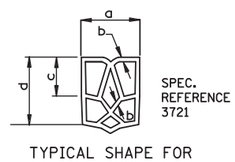

TYPICAL SHAPE FOR SATISFACTORY INSTALLATION IN JOINT (5 CELL MIN.)

PREFORMED ELASTOMERIC TYPE DETAIL

NOTES:

SEE STANDARD PLATE 1103 FOR DOWEL BAR ASSEMBLY.

SEE STANDARD PLATE 1150 FOR CONSTRUCTION OF HEADER JOINTS.

JOINT WIDTH TOLERANCE IS + 1/16" TO - 1/32"

FURNISH AND INSTALL ALL JOINT SEALER IN ACCORDANCE WITH THE MANUFACTURER'S RECOMMENDATIONS.

SEE STANDARD PLANS 5-297.217 AND 5-297.219, FOR CONCRETE MAINLINE/RAMP PAVEMENT.

SEE PAVING LAYOUTS IN THE PLANS FOR JOINT CLASS DESIGNATION TO BE USED AND SPECIAL REINFORCEMENT REQUIRED.

① JOINT DEPTH SHALL BE:
FOR CONCRETE OVERLAYS - 1/3 THE PAVEMENT THICKNESS
FOR CONCRETE PAVEMENT - 1/4 THE PAVEMENT THICKNESS

② SEE CONTRACTION JOINT SEALER DETAIL. WHEN USING PREFORMED JOINT SEALER, THE DEPTH SHALL BE 1/4" MORE THAN THE PREFORMED SEALER, WHEN COMPRESSED, TO FIT THE JOINT DESIGN WIDTH. "a" DIMENSION SHALL APPLY AT ANY POINT THROUGHOUT "c" DEPTH. SHARP INTERNAL CORNERS WILL NOT BE PERMITTED. ALL CORNERS SHALL BE PROVIDED WITH SUITABLE FILLET.

③ WHEN SEALING, THE JOINT FACES SHALL BE CLEANED AND DRIED BY SANDBLASTING AND AIR BLASTING.

④ PRIOR TO SEALING THE JOINT, A 1/2" DIA. CLOSED CELL BACKER ROD SHALL BE PLACED SUCH THAT THE TOP OF THE BACKER ROD IS 1/2" BELOW THE SURFACE OF THE PAVEMENT. NON SELF-LEVELING SILICONE SHALL BE TOOLED INTO THE JOINT MAINTAINING A SEAL AND BEAD THICKNESS OF 1/4".

⑤ PRIOR TO SEALING THE JOINT, A 1/2" DIA. CLOSED CELL BACKER ROD CAPABLE OF WITHSTANDING SEALANT TEMPERATURES OF 400 DEGREES F. SHALL BE PLACED 1/2" BELOW THE TOP OF PAVEMENT.

EXPANSION JOINT REFERENCE, DETAIL & SEALER SPEC. TABLE

JOINT REFERENCE		JOINT DETAIL	JOINT SEALER SPEC.	JOINT WIDTH
WITHOUT DOWELS	WITH DOWELS			
E1H	E1H-D	A	3725	1/2"
E2H	E2H-D	B	3725	1"
E4H		C	3725	2"
	E4H-D	D	3725	2"
E8H		STANDARD PLAN 5-297.229	3725	4"

LEGEND — EXAMPLE (E4H-D)
- E = EXPANSION JOINT
- NO. = JOINT REFERENCE
- H = HOT POURED
- -D = DOWEL BARS

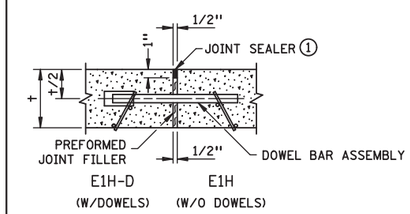

JOINT DETAIL A

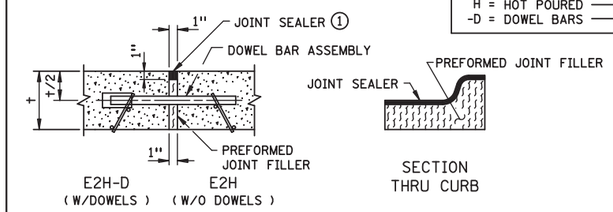

JOINT DETAIL B

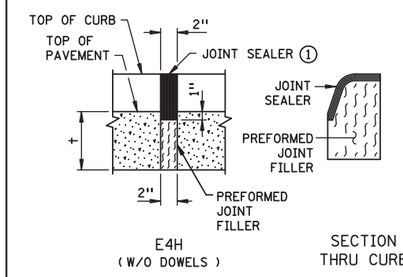

JOINT DETAIL C

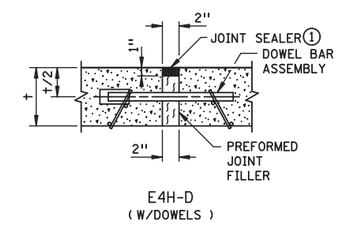

JOINT DETAIL D

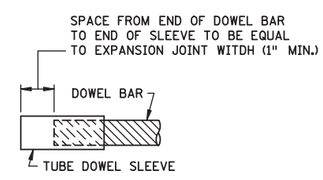

DOWEL BAR SLEEVE DETAIL

NOTES:

PREFORMED JOINT FILLER MATERIAL, SPEC. 3702.

FOR DOWEL BAR ASSEMBLY, SEE STANDARD PLATE 1103.

① JOINT SEALER SPEC. 3725. THE JOINT FACES SHALL BE CLEANED AND DRIED BY SANDBLASTING AND AIR BLASTING. TOP OF SEALER, FLUSH TO 1/8" BELOW TOP OF PAVEMENT SURFACE. MAKE TOP OF SEALER FOR CURB SECTION D JOINTS FLUSH WITH SURFACE ±1/8".

REVISION:

APPROVED: 8-6-2014
DIRECTOR, OFFICE OF MATERIALS AND ROAD RESEARCH

CONTRACTION JOINTS
DESIGN C

MINNESOTA DEPARTMENT OF TRANSPORTATION

REVISED:

STATE DESIGN ENGINEER

APPROVED: 8-6-2014

PAVEMENT JOINTS
CONTRACTION (DESIGN C) AND EXPANSION (DESIGN E)

STANDARD PLAN 5-297.221 | 1 OF 2

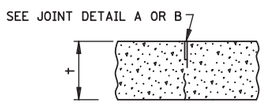

L1U & L1H ①

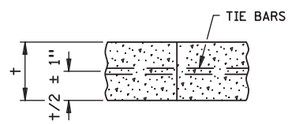

L2TU ②

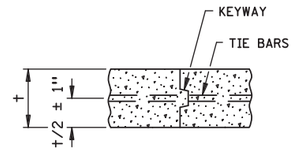

L2KTU ③

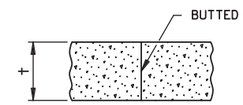

L3U

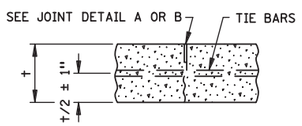

L1TU & L1TH ①

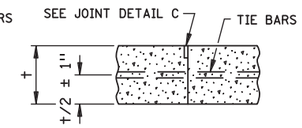

L2TH ②

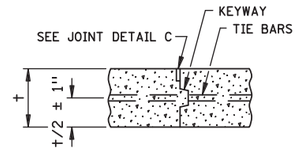

L2KTH ③

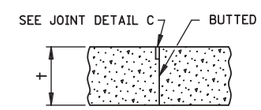

L3H

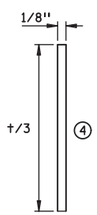

JOINT DETAIL A
SAWED & UNSEALED

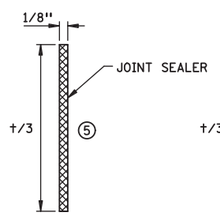

JOINT DETAIL B
SAWED & SEALED

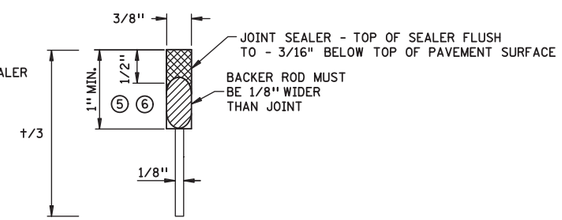

JOINT DETAIL C
SAWED & SEALED

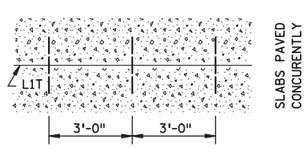

L1T PAVING DETAIL

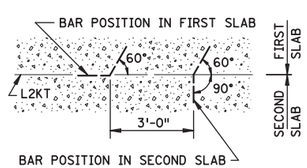

L2T & L2KT TIE BAR BENDING AND PAVING DETAIL

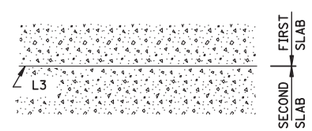

L3 PAVING DETAIL

TIEBAR TABLE

PAVEMENT THICKNESS	TIEBAR SIZE	LENGTH
< 10-1/2"	NO. 4	30"
≥ 10-1/2"	NO. 5	36"
ALL THICKNESS WHEN TYING TO CURB AND GUTTER	NO. 4	30"

THE TIE BAR SPACING FOR ALL L2T AND L2KT JOINTS SHALL BE 3'-0" CENTER TO CENTER AND BENT 60° AS SHOWN, EXCEPT WHEN NOTED OTHERWISE IN THE PLANS.

TIE BARS IN THE L2T AND L2KT JOINTS SHALL BE THE SAME SIZE AND LENGTH AS USED FOR THE L1T JOINTS, WHEN TYING PAVEMENT TO PAVEMENT. TIE BARS IN THE L2KT JOINTS SHALL BE NO. 4 X 2'- 6", WHEN TYING CURB & GUTTER TO PAVEMENT.

ALL TIE BARS SHALL BE EPOXY COATED AND COMPLY WITH SPEC. 3301.

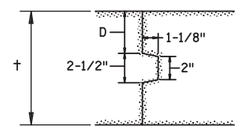

PAVEMENT KEYWAY DETAIL

KEYWAY DIMENSION TABLE

† PAVEMENT THICKNESS	D (TOLERANCE ± 1/4")
< 7"	NO KEYWAY
7" TO 7-1/2"	3"
8" TO 10"	4"
≥ 10-1/2"	5"

KEYWAY (1-1/8" x 2" x 2-1/2") MAY BE FORMED WITH MOLD OR METAL FORM. OTHER APPROVED KEYWAY SHAPES GIVING EQUIVALENT CONSTRUCTION FEATURES MAY BE USED WITH APPROVAL OF THE ENGINEER.

LONGITUDINAL JOINT REFERENCE, DETAIL & SEALER SPECIFICATION TABLE

JOINT REFERENCE			JOINT DETAIL	JOINT SEALER SPEC	JOINT WIDTH
WITHOUT TIE BARS	WITH TIE BARS	WITH KEYWAY & TIE BARS			
L1U	L1TU		A	UNSEALED	1/8"
L1H	L1TH		B	3725	1/8"
	L2TU	L2KTU	NONE	UNSEALED	
	L2TH	L2KTH	C	3725	3/8"
L3U			NONE	UNSEALED	
L3H			C	3725	3/8"

LEGEND — EXAMPLE (L2KTH)

- L = LONGITUDINAL JOINT
- NO. = JOINT REFERENCE
- 1 = PAVED CONSTRUCTION JOINT
- 2 = TIED/KEYED CONSTRUCTION JOINT
- 3 = BUTTED CONSTRUCTION JOINT
- K = KEYWAY
- T = TIE BARS
- U = UNSEALED
- H = HOT POURED

NOTES:

NORMALLY, TIED PAVEMENT WIDTHS SHALL NOT EXCEED FOUR LANES, EXCEPT BRIDGE APPROACH PANELS AND PAVEMENT TAPERS.

JOINT WIDTH TOLERANCE IS + 1/16 IN. TO - 1/32 IN.

FURNISH AND INSTALL ALL JOINT SEALER IN ACCORDANCE WITH THE MANUFACTURER'S RECOMMENDATIONS.

TIED/KEYED AND BUTTED CONSTRUCTION JOINTS SHALL BE UNSEALED EXCEPT AS OTHERWISE NOTED IN THE PLAN OR REQUIRED BY THE ENGINEER.

SEE STANDARD PLANS 5-297.217 AND 5-297.219 FOR CONCRETE MAINLINE AND RAMP PAVEMENT.

SEE PAVING LAYOUTS IN THE PLANS FOR JOINT CLASS DESIGNATIONS TO BE USED AND SPECIAL REINFORCEMENT REQUIRED.

WHEN CURB AND GUTTER IS PLACED ADJACENT TO CONCRETE MAINLINE, THE TIEBARS SHALL BE PLACED A MINIMUM OF 2" ABOVE THE CURB AND GUTTER GRADE.

① SEE THE LONGITUDINAL JOINT REFERENCE, DETAIL & SEALER SPECIFICATION TABLE TO DETERMINE JOINT DETAIL.

② CONCRETE PAVEMENTS LESS THAN 7" SHALL USE L2TU AND L2TH JOINTS UNLESS OTHERWISE ALLOWED BY THE ENGINEER.

③ CONCRETE PAVEMENTS GREATER THAN OR EQUAL TO 7" SHALL USE L2KTU AND L2KTH JOINTS UNLESS OTHERWISE ALLOWED BY THE ENGINEER.

④ THE JOINT FACES SHALL BE CLEANED WITH WATER DURING THE SAW CUTTING OPERATION OR BY WATER BLASTING AFTER SAWING.

⑤ THE JOINT FACES SHALL BE CLEANED AND DRIED BY SANDBLASTING AND AIR BLASTING.

⑥ PRIOR TO SEALING THE JOINT, A 1/2" DIAMETER CLOSED CELL BACKER ROD CAPABLE OF WITHSTANDING SEALANT TEMPERATURES OF 400 DEGREES F. SHALL BE PLACED 1/2" BELOW THE TOP OF THE PAVEMENT.

REVISION:

APPROVED: 8-6-2014

DIRECTOR, OFFICE OF MATERIALS AND ROAD RESEARCH

MINNESOTA DEPARTMENT OF TRANSPORTATION

REVISED:

APPROVED: 8-6-2014

STATE DESIGN ENGINEER

PAVEMENT JOINTS
LONGITUDINAL (DESIGN L)

STANDARD PLAN 5-297.221 | 2 OF 2